VISVESVARAYA TECHNOLOGICAL UNIVERSITY

BELAGAVI

A
PROJECT REPORT (BEC786)
ON

"IOT Based Multifunctional Camouflage Military Robot"

Submitted in partial fulfillment of the requirement for the award of degree

Bachelor of Engineering
In
Electronics and Communication Engineering
For the academic
year 2025-2026
Submitted by

GAGAN B D
(1HK22EC044)

MOHAMMED SINAN
(1HK22EC095)

VAISHNAVI V
(1HK22EC178)

VIKAS S
(1HK22EC181)

Under the Guidance of

Dr. Maaz Ahmed

Associate Professor, Dept. of ECE

HKBKCE, Bangalore

DEPARTMENT OF
ELECTRONICS AND COMMUNICATION ENGINEERING

H.K.B.K COLLEGE OF ENGINEERING

S.NO.22/1, Opposite, Manyata Tech Park Rd, NAGAWARA,
BENGALURU -560045

H.K.B.K COLLEGE OF ENGINEERING

S.No.22/1, Opposite, Manyata Tech Park Rd , Nagawara, Bengaluru-560045

Department of Electronics and Communication Engineering

Certificate

Certified that the Project Work entitled **"IOT Based Multifunctional Camouflage Military Robot"** a bonafide work carried out by **GAGAN B D (1HK22EC044), MOHAMMED SINAN (1HK22EC095), VAISHNAVI V (1HK22EC178) and VIKAS S (1HK22EC181)** in partial fulfillment for the award of Bachelor of Engineering in Electronics and Communication Engineering of the Visvesvaraya Technological University, Belagavi during the year 2025-26. It is certified that all corrections/suggestions indicated for the Internal Assessment have been incorporated in the report deposited in the departmental library. The Project report has been approved as it satisfies the academic requirements in respect of Project Work prescribed for Bachelor of Engineering Degree.

Signature of the Guide Signature of the HOD Signature of the Principal

External Viva

Name of the Examiners **Signature with date**

1.

2.

ACKNOWLEDGEMENT

I am grateful to the Chairman, **Mr. C. M. Ibrahim,** for having provided me an opportunity to emerge as a responsible citizen with Professional Engineering Skills and moral ethics.

I am grateful to the Director, **Mr. C. M. Faiz Mohammed,** for having provided me with excellent facilities in the college during my course.

I am indebted to the Principal, **Dr. Mohammed Riyaz Ahmed,** for facilitating a congenial academic environment in the College.

I am grateful to the HOD**, Dr. Manjunath R Kounte,** for his kind support, guidance and motivation during the B.E Degree Course and especially during the course.

I thank **Dr. Maaz Ahmed,** Associate Professor for his valuable guidance, suggestions and encouragement throughout my project work.

I would also thank to our project coordinators, **Prof. Sheikh Haroon Safdar,** and **Prof. Reshma Jinto,** for their continuous support and encouragement.

I also thank all the **staff members of the Department Electronics and Communication Engineering** and all those who have directly or indirectly helped me with their valuable suggestions in the successful completion of this project report.

GAGAN B D	**(1HK22EC044)**
MOHAMMED SINAN	**(1HK22EC095)**
VAISHNAVI V	**(1HK22EC178)**
VIKAS S	**(1HK22EC181)**

ABSTRACT

The increasing complexity of modern military and disaster-response operations requires intelligent, autonomous systems capable of performing high-risk tasks with minimal human involvement. To address this need, this project presents an IoT-Based Multifunctional Camouflage Military Robot, designed to enhance safety, improve surveillance capability, and operate efficiently in hazardous environments. The robot integrates adaptive camouflage technology, IoT connectivity, and real-time environmental sensing to support missions such as reconnaissance, search-and-rescue, and security monitoring. Equipped with multiple sensing units—including PIR motion sensors, ultrasonic and IR obstacle detectors, gas sensors (MQ-2, MQ-135), a color sensor (TCS34725), a metal detector, GPS, and RFID authentication—the robot can detect human presence, avoid obstacles, sense toxic gases, and track location accurately, ensuring reliable situational awareness in diverse conditions.

A hybrid control architecture combining Raspberry Pi 4 and Arduino Mega 2560 powers the robot's advanced functionalities. The Raspberry Pi manages high-level tasks such as image processing via the Pi Camera, live video streaming, and communication through the SIM7670C LTE module using the MQTT protocol. Simultaneously, the Arduino oversees low-level operations including sensor data acquisition, motor control through the L298N driver, and safety feedback loops using the INA219 power monitor. One of the project's standout features is its adaptive camouflage system, achieved by reading ambient colors using the TCS34725 sensor and displaying matching patterns on a TFT screen. This enables the robot to visually blend into its environment, reducing detectability during military operations. A robust power system featuring a Li-ion battery, BMS protection, and buck converters ensures stable electrical performance for all components.

The developed system is capable of real-time remote control, autonomous data logging, environmental hazard detection, obstacle navigation. multifunctionality for diverse applications including military surveillance, anti-poaching patrols, industrial safety checks, and disaster-response missions such as gas-leak detection or human search operations. The expected outcome is a fully functional robotic platform capable of delivering live video feed, environmental data, instant alerts, and adaptive camouflage, significantly reducing the risks faced by soldiers and emergency responders.

TABLE OF CONTENT

CONTENT		PAGE NO
CERTIFICATE		**I**
ACKNOWLEDGMENT		**II**
ABSTRACT		**III**
CHAPTER 1: INTRODUCTIOIN		**1-8**
1.1	Overview	1
1.2	Significance of the Project at National Level	4
1.3	Significance of the Project at International Level	5
1.4	Applications	6
1.5	Advantages	7
1.6	Disadvantages	8
CHAPTER 2: LITERATURE SURVEY		**9-12**
2.1	Related Works	9
2.2	Scope of the Project	11
2.3	Objectives of the project	12
CHAPTER 3: METHODOLOGY		**13-30**
3.1	Description	13
3.2	Novelty of the Project	14
3.3	Design and Development	15
3.3.1	Hardware Requirements	15
3.3.2	Software Requirements	28
3.3.3	Implementation	30
CHAPTER 4: RESULT AND DISCUSSION		**32-35**
4.1	Result and Analysis	32
4.2	Discussion	35

CHAPTER 5: CONCLUSION AND FUTURE SCOPE **36-38**

5.1 Conclusion 36

5.2 Future Scope 37

REFERENCES

APPENDIX A

CIRCUIT DIAGRAM & COMPONENT LIST

APPENDIX B

CODE & FLOW CHART

APPENDIX C

DATASHEET

APPENDIX D

IEEE / BASE PAPER

LIST OF FIGURES

Figure No	Figure Name	Page No
3.1	Raspberry Pi 4 Model B (4GB)	16
3.2	Pin Diagram of Raspberry pi 4 Model	17
3.3	TXS0108E LOGIC SHIFTER	19
3.4	USB Camera	20
3.5	SIM7670C	21
3.6	RFID Module	23
3.7	PIR Sensor	25
3.8	MQ-2 Sensor	25
3.9	Motor Driver	26
3.10	Arduino IDE	28
3.11	Command Prompt	29
3.12	Block Diagram of Proposed Model	31
4.1	Prototype of The Proposed Model	33
4.2	Sensor Layer Right	34
4.3	Sensor Layer Left	34
4.4	Setup Model	34

CHAPTER 1

INTRODUCTION

1.1 OVERVIEW

The IoT-Based Multifunctional Camouflage Military Robot is an advanced autonomous robotic platform designed to improve safety, surveillance capability, and operational efficiency in military and disaster-response environments. The robot integrates IoT connectivity, adaptive camouflage, and a wide range of sensors to perform critical tasks in hazardous or hostile areas where human presence is dangerous or limited. It is built to support missions such as reconnaissance, real-time monitoring, human detection, gas sensing, metal detection, and GPS-based tracking, making it suitable for modern defense and rescue applications. A key highlight of the system is its adaptive camouflage technology, which allows the robot to blend seamlessly with its surroundings through color detection and dynamic TFT-based color output.

The robot uses a hybrid processing architecture consisting of Raspberry Pi 4 and Arduino Mega. Raspberry Pi manages high-level tasks such as camera processing, cloud communication, and the camouflage display system, while Arduino handles low-level sensor readings, motor control, power monitoring, and safety functions. Using sensors such as MQ-2 and MQ-135 gas sensors, PIR sensor, ultrasonic sensor, IR sensor, metal detector, color sensor (TCS34725), and INA219, the robot continuously analyzes its environment and reacts accordingly. Remote control and monitoring are achieved through the SIM7670C 4G LTE module using the MQTT protocol, enabling live video streaming, alert notifications, and real-time data access from any location.

With features such as RFID-based authentication, GPS tracking, autonomous obstacle detection, hazardous gas monitoring, and adaptive camouflage, the robot provides a multifunctional and reliable platform for both military and civilian applications. It can be deployed for border surveillance, battlefield monitoring, anti-poaching activities, industrial safety inspections, and disaster-response operations. By minimizing human exposure to dangerous environments and providing rapid situational awareness, this project represents a significant step forward in smart robotics and IoT-enabled defense solutions.

Technology behind the Camouflage Military Robot

1. Internet of Things (IoT) Communication

- The robot uses 4G LTE (SIM7670C) for long-range wireless communication.
- IoT protocols like MQTT enable lightweight, real-time data transfer between the robot and a remote control dashboard.
- Through IoT, users can receive alerts, access live video feed, and control the robot from anywhere.

2. Hybrid Processing Architecture

- Raspberry Pi 4 handles:

  Live video streaming (Pi Camera)

  Camouflage processing and TFT display control

  IoT communication via LTE
- Arduino Mega 2560 manages:

  Real-time sensor readings

  Motor control via L298N driver

  Safety checks and power monitoring
- This dual-controller architecture ensures smooth multitasking and efficient workload distribution.

3. Adaptive Camouflage Technology

- A TFT RGB display replicates the detected colors on the robot's surface to blend into the environment.
- Inspired by natural camouflage (like chameleons), this enhances stealth for military and surveillance operations.

4. Multi-Sensor Fusion System

The robot integrates multiple sensors to collect and combine environmental data:

- Gas Sensors (MQ-2 & MQ-135): Detect smoke, harmful gases, and air quality.
- PIR Sensor: Detects human movement.
- Ultrasonic & IR Sensors: Enable obstacle detection and autonomous navigation.
- Metal Detector: Identifies landmines or hidden metal objects.
- GPS Module: Provides accurate location tracking.
- RFID System: Ensures secure access and operation.
- INA219: Monitors power usage and battery health.

Sensor fusion techniques allow the robot to make accurate decisions by combining inputs from multiple sensors.

Comparison: Traditional Camouflage vs. IoT-Based Adaptive Camouflage

Feature	Traditional Camouflage	IoT-Based Adaptive Camouflage Robot
Color Adaptation	Fixed printed colors	Dynamic color change using TFT + sensor
Environment Adaptability	Works only in specific terrain	Adapts to any environment in real time
Sensing Capability	No sensing	Uses TCS34725 color sensor
Brightness Adjustment	Cannot adjust to lighting	Auto brightness + color adjustment
Stealth Performance	Limited in changing environments	High stealth with continuous adaptation
Technology Integration	No electronics involved	IoT, Raspberry Pi, Arduino integrated
Intelligence Level	No processing or decision-making	Intelligent decision-making via microcontrollers
Remote Visibility	No remote monitoring	Live video streaming via LTE
Threat Detection	Cannot detect threats	Detects gas, humans, obstacles, metal
Remote Control	No remote control	Fully remote-controlled via IoT
Mission Flexibility	One pattern = one mission	Multi-terrain, multi-purpose adaptability
Data Transmission	No data communication	Sends real-time data, alerts, telemetry
Automation	Fully manual usage	Semi-autonomous movement + alerts
Security Features	No authentication	RFID-based access control
Power System	Non-electric	Smart Li-ion battery with BMS & monitoring

1.2 SIGNIFICANCE OF THE PROJECT AT NATIONAL LEVEL

The IoT-Based Multifunctional Camouflage Military Robot holds major significance at the national level as it directly contributes to strengthening national security, defense capability, and disaster-response operations. With rising threats along borders, increasing infiltration attempts, and the need for continuous surveillance, this robot provides India with an advanced, low-cost, and reliable solution for real-time monitoring in high-risk and remote areas. Its adaptive camouflage system allows it to blend into the environment, making it ideal for covert military missions, reducing the exposure of soldiers to danger, and enhancing the efficiency of surveillance in border regions, forests, and conflict zones.

This project also supports disaster management on a national scale. With its ability to detect toxic gases, identify human presence, and navigate hazardous terrains, the robot can be deployed during earthquakes, industrial accidents, and chemical leaks.

This helps rescue teams save lives while minimizing their own risk. Additionally, its IoT-based communication allows real-time updates to centralized command centers, supporting quicker decision-making during national emergencies.From a technological standpoint, the project promotes self-reliance and innovation, aligning with initiatives like Make in India and Atmanirbhar Bharat.

By integrating indigenous robotics, IoT, and sensor technologies, the robot reduces dependence on imported defense equipment and strengthens the country's domestic technological capabilities. It can also be scaled for use in various sectors such as forest protection, anti-poaching, industrial safety, and homeland security. Overall, this project enhances national preparedness, improves defense intelligence, and contributes to building a safer and more technologically advanced nation.

1.3 SIGNIFICANCE OF THE PROJECT AT INTERNATIONAL LEVEL

The IoT-Based Multifunctional Camouflage Military Robot carries significant value at the international level as it contributes to global advancements in defense technology, autonomous surveillance, and disaster-response innovation. With increasing geopolitical tensions, border conflicts, and the rise of asymmetric warfare worldwide, nations are actively seeking reliable robotic systems that can perform surveillance and reconnaissance without risking human lives. The robot's adaptive camouflage technology, real-time IoT connectivity, and multi-sensor intelligence position it as a competitive and innovative solution comparable to modern defense systems used globally.

On a humanitarian scale, the robot supports international disaster-relief operations by detecting toxic gases, locating survivors, and navigating dangerous terrains during natural calamities such as earthquakes, wildfires, and industrial explosions. This makes it highly useful for global organizations like the UN, Red Cross, and international rescue teams that require robust, portable, and intelligent robotic tools during emergency missions across the world.

Technologically, the project reflects global trends in smart robotics, IoT integration, AI-driven sensing, and autonomous systems**,** showcasing the potential of developing countries to contribute to the international robotics and defense ecosystem. Its cost-effective and scalable design makes it attractive for nations with limited defense budgets but high security needs. The project also encourages cross-border collaboration in research, innovation, and security technology development, strengthening global partnerships. Overall, the robot stands as a promising international solution for security, safety, and technological advancement.

Beyond security and disaster relief, this project also contributes to the global technological landscape by promoting innovation in low-cost intelligent robotics. Many countries struggle with expensive military and surveillance robots, limiting their adoption. This project demonstrates how advanced features—such as adaptive camouflage, IoT connectivity, and multi-sensor fusion—can be achieved with affordable and modular components. This makes the system suitable for export, research collaboration, and deployment in developing nations that require modern security tools but have limited budgets. By offering a scalable and customizable robotic platform, the project supports international peacekeeping missions, enhances global technological inclusivity, and encourages worldwide adoption of smarter, safer, and more sustainable robotic solutions.

1.4 APPLICATIONS

1. The robot can be deployed for high-risk border surveillance missions where soldiers usually face threats from enemy forces. Its adaptive camouflage allows it to blend into the surroundings, enabling stealth monitoring while capturing live video and detecting movement without being noticed.
2. In hostile war zones, the robot can enter dangerous areas ahead of soldiers to detect human presence, metal objects, explosives, and toxic gases. This significantly reduces the risk to troops by providing critical situational awareness before they proceed.
3. The robot is highly useful in wildlife research and monitoring, where human movement might disturb animal behavior. Its silent mobility and ability to camouflage make it suitable for continuous observation of species in their natural habitat.
4. Forest departments can deploy the robot in anti-poaching operations to monitor restricted regions. It can detect unauthorized human presence, track movements, and send instant alerts to authorities using IoT connectivity, helping protect endangered animals.
5. During earthquakes, building collapses, or landslides, the robot can navigate through debris and narrow spaces to detect trapped survivors. With live video streaming and PIR-based human detection, it provides emergency teams with vital information without risking human lives.
6. In areas exposed to chemical leaks, fires, or toxic gases, the robot can sense hazardous air conditions using MQ-series sensors. It sends immediate warnings to emergency personnel, helping them plan safer rescue or containment strategies.
7. The robot can be used in industries such as chemical plants and oil refineries to inspect equipment, detect gas leaks, and monitor temperature or air quality. This enhances workplace safety and reduces the chance of industrial accidents.
8. In mining environments, the robot can be deployed to inspect deep tunnels, detect harmful gases, and assess structural safety conditions. This protects miners by allowing remote monitoring of dangerous underground sections.
9. The robot can act as an autonomous patrolling system in campuses, warehouses, and high-security facilities. It provides 24/7 surveillance, detects suspicious activities, and sends alerts in real time through LTE and IoT communication.
10. It can support smart city monitoring by observing public spaces, tracking environmental conditions, and reporting unusual events instantly. This data helps in improving urban safety, environmental awareness, and overall management.

1.5 ADVANTAGES

Some of the advantages are mentioned below.

1. The robot significantly reduces human exposure to dangerous environments such as war zones, disaster sites, and toxic industrial areas. By handling high-risk tasks remotely, it ensures greater safety for military personnel, rescue teams, and workers.
2. Its adaptive camouflage capability enhances stealth operations by blending into the surrounding environment. This allows the robot to operate unnoticed, making it highly effective for surveillance, reconnaissance, and wildlife monitoring.
3. The integration of IoT and LTE communication enables real-time monitoring and remote control from any location. This ensures constant situational awareness and faster decision-making without requiring physical presence.
4. Multiple sensors allow the robot to detect humans, obstacles, gases, and metal objects simultaneously. This multi-sensor fusion increases accuracy, improves navigation, and enhances environmental understanding.
5. The robot can operate continuously in hazardous conditions where humans cannot stay for long durations. Its durability and autonomy make it suitable for prolonged missions without fatigue or risk.
6. By using Raspberry Pi and Arduino together, the system achieves both high-level processing and reliable real-time control. This hybrid architecture makes the robot efficient, flexible, and capable of running complex tasks smoothly.
7. The robot helps rescue teams locate survivors faster during disasters by entering collapsed structures and detecting human presence. This leads to quicker, safer, and more effective rescue operations.
8. It provides accurate sensing of toxic gases and hazardous environmental parameters, helping industries and disaster-response teams identify danger zones early and prevent accidents.
9. Its GPS-based tracking ensures precise navigation and allows operators to monitor the robot's position in real time. This makes route planning and mission execution more efficient.
10. The robot's live video streaming and data logging support continuous surveillance and evidence recording. This is beneficial for security, research, and monitoring activities.
11. RFID authentication adds a layer of security, preventing unauthorized access or misuse.

1.6 DISADVANTAGES

1. The robot depends heavily on stable network connectivity such as LTE or IoT platforms. In remote areas, war zones, or underground environments, weak signals can affect real-time communication and control.
2. The entire system uses multiple sensors, microcontrollers, and communication modules, making it technically complex. This increases the chances of system failures if a single component malfunctions.
3. The project requires continuous power to operate motors, sensors, and communication units. Battery life is limited during long missions, and frequent recharging or battery replacement becomes necessary.
4. Camouflage using RGB displays works well under controlled conditions, but its effectiveness reduces in extremely bright sunlight, dusty environments, or complex backgrounds where perfect blending is difficult.
5. The robot may face difficulty navigating rough terrains, deep mud, steep slopes, or rocky surfaces. Its small wheels and lightweight structure limit its mobility in extreme outdoor conditions.
6. Live video streaming, sensor processing, and communication consume significant computational resources. If the processor overheats or becomes overloaded, system performance may drop.
7. In disaster situations with debris, fire, or falling objects, there is a risk of physical damage to sensors, wiring, or the robotic chassis, which can hinder mission continuity.
8. The cost of integrating high-quality sensors, LTE modules, GPS, and display panels makes the robot relatively expensive. This may limit large-scale deployment in low-budget projects.
9. Environmental sensors like gas detectors and PIR sensors have accuracy limitations and may give incorrect readings due to interference, temperature changes, or sensor drift over time.
10. The robot requires trained personnel to operate, maintain, and troubleshoot it. Without proper training, incorrect handling or configuration may lead to performance issues.

CHAPTER 2

LITERATURE SURVEY

2.1 RELATED WORKS

Many recent studies in military, surveillance, and rescue robotics focus on integrating IoT, wireless communication, and basic camouflage features to enhance safety and operational efficiency. These works collectively highlight the growing trend of using unmanned robots to minimize human involvement in high-risk environments. Prior research demonstrates that sensor-based robots can support battlefield monitoring, environment sensing, and basic autonomous tasks, forming the foundation for multifunctional robotic platforms.

Kavipriya et al. [1] presented an IoT-based multifunctional camouflage military robot capable of remote surveillance and environmental monitoring. Their work shows the potential of combining IoT connectivity with a camouflaged robot for defense applications, but the system is limited to core surveillance and does not deeply integrate advanced sensing features such as gas detection, metal detection, or GPS-based tracking found in modern platforms.

Kishore [2] and colleagues designed a multifunctional army robot that uses camouflage techniques to blend with surroundings while performing navigation and live video transmission. This research emphasizes the importance of visual stealth and multifunctionality, though the focus remains more on the camouflage mechanism than on large-scale sensor fusion, cloud dashboards, or multi-hazard detection systems.

Kulkarni et al. [3] proposed an advanced camouflage robot that uses sensor fusion and machine learning to improve spying and target detection. Their approach enhances intelligence gathering by processing combined sensor inputs, but it does not explore remote IoT-based control, industrial safety uses, or disaster-response applications in depth, which limits its scope to surveillance-oriented tasks.

Anand Vijay et al. [4] developed a robot equipped with camouflage technology to detect human presence in war fields and earthquake-affected zones. Their system highlights how camouflage robots can extend beyond military operations into rescue missions. However, the design is mainly optimized for human detection and does not include additional features like toxic gas detection, RFID access control, or GPS navigation.

Several other works explore army robots with camouflage displays, IoT-enabled security robots, and multi-sensor surveillance systems. These collectively demonstrate the feasibility of using robotic platforms for silent patrolling, basic monitoring, and situational awareness. However, most of these related studies address either military spying or environmental sensing, rather than unifying both military and disaster-response capabilities into a single robot.

Compared to previous works, the present IoT-based multifunctional camouflage military robot integrates a more comprehensive set of features—including TFT-based adaptive camouflage, dual-controller architecture (Raspberry Pi + Arduino), 4G LTE and MQTT connectivity, human detection, toxic gas sensing, metal detection, GPS tracking, RFID security, and real-time video surveillance. This broader combination fills the gaps in earlier systems by providing a versatile robot suitable for defense, industrial safety, wildlife monitoring, and disaster-response operations.

Several studies in recent years have also explored the use of IoT-enabled ground robots for industrial inspection and hazardous environment monitoring. These works typically integrate gas sensors, temperature sensing, and live video to identify risky conditions in factories, chemical plants, and underground tunnels. While they successfully demonstrate the usefulness of autonomous robots in dangerous industrial zones, they generally lack camouflage features, multi-platform control systems, and advanced environmental sensing combinations that are essential for both military and rescue operations. This creates a gap in designing a truly multifunctional robotic system that can adapt to diverse field conditions.

Additional research on robotic surveillance emphasizes improving communication technologies such as Wi-Fi, RF modules, and Zigbee for remote monitoring. However, many of these communication methods suffer from range limitations and signal instability in complex terrains. Unlike these earlier works, the use of LTE-based SIM modules in recent robotic designs ensures long-range, uninterrupted connectivity, making them more suitable for real-world missions. Still, most studies focus on single-purpose surveillance robots, leaving room for multifunctional systems that combine camouflage, IoT monitoring, environmental sensing, and autonomous navigation into one platform—precisely what the proposed robot aims to achieve.

2.2 SCOPE OF THE PROJECT

The scope of this project includes developing a multifunctional robot capable of performing surveillance, monitoring, and rescue tasks in high-risk environments. It focuses on integrating IoT technology, LTE communication, and adaptive camouflage to support military and security operations.

The project also covers the use of multi-sensor systems for detecting human presence, toxic gases, metal objects, and environmental changes. This expands its applicability to disaster-response missions and industrial safety monitoring.

Another important scope area is real-time data transmission through 4G LTE and MQTT, allowing the robot to be controlled and monitored from remote locations. This makes the system suitable for long-range operations where manual intervention is not possible.

The project further aims to explore hybrid processing using both Raspberry Pi and Arduino to achieve efficient multitasking. This includes camera streaming, sensor reading, obstacle detection, and camouflage processing working together without delay.

The project is also intended for research and academic use, helping students and developers study robotics, IoT, automation, and embedded systems. It serves as a practical platform for experimenting with advanced robotic concepts.

Additionally, the scope extends to environmental and wildlife monitoring applications, where the robot can silently observe and collect data without disturbing natural habitats. This makes it valuable for conservation and ecological studies.

The system is also designed to allow easy upgrades in the future. Additional modules like thermal cameras, night-vision systems, or AI-based object detection can be integrated without changing the overall architecture, making the robot highly scalable.

Finally, the project covers secure operation through RFID authentication, ensuring that only authorized users can control or access the robot. This adds an extra layer of protection for military and sensitive applications.

2.3 OBJECTIVES OF THE PROJECT

The objectives of this project focus on developing an intelligent, multifunctional robotic system capable of operating in dangerous, complex, and remote environments. By integrating IoT technologies, adaptive camouflage, and multiple sensors, the project aims to create a reliable platform for military, industrial, and disaster-response applications

1. To design an advanced adaptive camouflage system that enables the robot to match its surface color with the surrounding environment in real time. This is achieved using a high-accuracy color sensor that continuously scans ambient colors and a TFT RGB display that instantly reproduces those colors on the robot's exterior. By doing so, the robot becomes difficult to detect during military surveillance, border monitoring, or wildlife observation. This feature enhances stealth, reduces visibility to enemies or intruders, and allows the robot to perform sensitive operations without drawing attention.
2. To implement a robust IoT-based remote monitoring and control system that ensures long-range, uninterrupted communication between the robot and the operator. Using 4G LTE (SIM7670C) and MQTT protocol, the robot can send live sensor data, video feed, alerts, and status updates instantly. This allows the operator to control movement, monitor hazards, and make decisions from any remote location. The extended communication range enhances mission flexibility and ensures reliable operation even in locations where Wi-Fi or RF communication fails.
3. To integrate a complete multi-sensor detection system capable of identifying humans, obstacles, hazardous gases, and metallic objects with high accuracy. Sensors such as PIR, ultrasonic, IR, MQ-2, MQ-135, and metal detectors work together to provide a comprehensive understanding of the surrounding environment. This objective ensures the robot can safely navigate, identify dangers, and support military, industrial, and rescue operations by detecting threats before humans enter the area.
4. To enable accurate GPS-based tracking for real-time location monitoring and navigation. By incorporating a GPS module, the robot can continuously update its position, helping operators plan routes, track movements, and coordinate missions effectively. This feature is crucial for outdoor surveillance, search-and-rescue operations, and long-range deployments where precise location data enhances safety and mission success.
5. To develop a hybrid processing architecture that uses Raspberry Pi for high-level tasks—such as video streaming, display processing, and IoT communication—while Arduino Mega handles real-time sensor reading, motor control, and safety checks. This combined approach ensures smooth multitasking, low latency control, and enhanced reliability.

CHAPTER 3

DESIGN AND DEVELOPMENT

3.1 METHODOLOGY

The methodology of this project is structured to develop a multifunctional military and rescue robot that integrates sensing, camouflage, communication, and navigation into a single robust system. The approach focuses on collecting environmental data, processing information through a hybrid architecture, and enabling real-time decision-making using IoT communication.

The first step involves sensor data acquisition, where all environmental parameters are collected using a wide range of sensors. Gas sensors (MQ-2, MQ-135), PIR sensors for human detection, ultrasonic and IR sensors for obstacle identification, and the TCS34725 color sensor for camouflage input continuously gather data. These readings form the foundation for navigation, detection, and camouflage operations.

The next stage focuses on control and processing, where the workload is distributed between Arduino Mega and Raspberry Pi. Arduino handles real-time tasks such as reading sensors, controlling motors through the L298N driver, and performing safety checks. Meanwhile, Raspberry Pi processes the camera feed, manages the camouflage display, handles image/video tasks, and coordinates IoT communication. This hybrid design ensures smooth, efficient multitasking.

The project then incorporates communication and connectivity using the SIM7670C 4G LTE module. Through MQTT protocol, the robot transmits live video, sensor data, environmental alerts, and GPS coordinates to a remote dashboard. This ensures long-range remote control and real-time monitoring even in distant or hazardous locations where human supervision is not possible.

Another key step is the decision-making algorithm, where the robot analyses sensor data to detect obstacles, humans, metals, and hazardous gases. Based on these inputs, the robot activates alerts, adjusts camouflage colors, or performs safe navigation. The color sensor input is processed to determine the dominant ambient color, which is instantly displayed on the TFT screen for adaptive camouflage.

The next part of the methodology involves actuation and movement, where the L298N motor driver controls the robot's motors to ensure stable navigation.

Feedback from INA219 power monitoring is used to maintain energy efficiency, while sensor inputs guide obstacle avoidance and directional movement.

The final stage covers integration, testing, and validation of the complete system. Hardware components—Raspberry Pi, Arduino, sensors, GPS, camera, and LTE module—are assembled and tested for communication accuracy, camouflage performance, sensor reliability, and movement stability. Field testing is conducted in different lighting and environmental conditions to validate real-world performance.

3.2 NOVELTY OF THE PROJECT

The novelty of this project lies in its unique combination of adaptive camouflage, IoT-based long-range communication, and multi-sensor environmental monitoring integrated into a single robotic platform. Unlike conventional surveillance robots that focus only on video monitoring or obstacle detection, this robot can dynamically change its surface color using a TFT display controlled by a color sensor, allowing it to blend with surrounding environments—an ability rarely implemented in low-cost ground robots. This adaptive camouflage significantly enhances stealth and makes the robot suitable for military reconnaissance, wildlife monitoring, and anti-poaching operations.

Another innovative aspect is the hybrid processing architecture that uses Raspberry Pi for high-level computing tasks such as video processing and IoT communication, while Arduino Mega handles real-time sensor interfacing and motor control. This dual-controller design ensures smooth multitasking and makes the system highly efficient and reliable compared to traditional single-controller robots.

Additionally, the use of 4G LTE-based SIM module communication provides long-distance remote control and monitoring, overcoming the range limitations of Wi-Fi or RF modules typically used in similar projects.

Overall, the project stands out by merging camouflage technology, IoT connectivity, real-time sensing, and autonomous navigation into one multifunctional system, offering a level of versatility and field readiness that is uncommon in standard academic or prototype robotics projects.

3.3 DESIGN AND DEVELOPMENT

3.3.1 HARDWARE REQUIREMENT

Hardware components required for the proposed system is as listed below

1. Raspberry Pi 4 Model B (4GB)

The Raspberry Pi 4 Model B is a high-performance single-board computer that serves as the primary control unit of the multifunctional camouflage military robot. It combines the power of a desktop-level processor with the flexibility of embedded hardware, making it capable of handling tasks such as real-time video processing, sensor integration, communication management, and graphical display control. Its quad-core ARM architecture and 4GB RAM allow smooth execution of Python-based programs, AI models, camera streaming, and multi-threaded operations required in intelligent robotic systems.

In this project, the Raspberry Pi acts as the brain of the robot, coordinating all major subsystems including the USB camera, TFT camouflage display, GPS, GSM/LTE communication modules, and various environmental sensors like PIR, gas detectors, color sensor, and power monitor. It processes incoming data, makes control decisions, generates alerts, updates camouflage patterns, and drives the motor control signals for navigation. Because of its high computational capability and support for modern communication protocols, the Raspberry Pi ensures reliable operation of the robot in surveillance, defense, and hazardous environment applications.

Key Features

- Quad-core ARM Cortex-A72 @ 1.5 GHz
- 4GB LPDDR4 RAM
- Built-in Wi-Fi and Bluetooth 5.0
- USB 3.0 ports for high-speed camera input
- 40-pin GPIO for sensor and driver interfacing
- Supports SPI, I^2C, UART, PWM
- MicroSD-based operating system

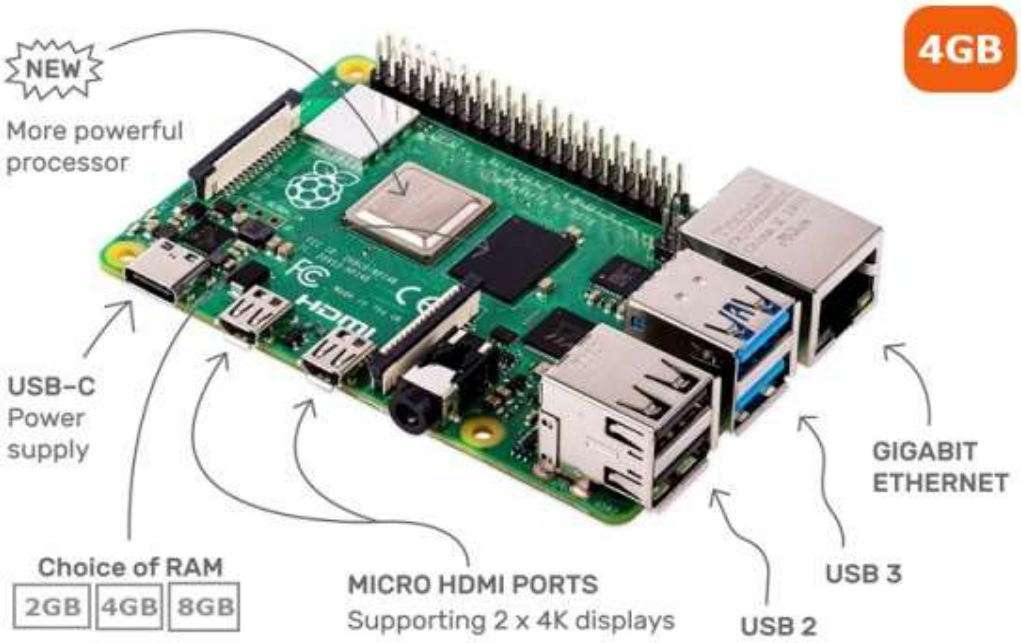

Figure 3.1 Raspberry Pi 4 Model B (4GB)

Working

The Raspberry Pi runs Python programs that:

- Capture video from the USB camera
- Read data from sensors (Color, PIR, Gas, INA219, RFID)
- Update camouflage pattern on the TFT display
- Send alerts and live data through the SIM7670C 4G module
- Control motor driver (L298N) for robot movement

It performs all high-level decisions such as obstacle detection, alerts, and remote communication.

Technical Specifications

Parameter	Value
CPU	Quad-core Cortex-A72 @ 1.5 GHz
RAM	4 GB LPDDR4
Wireless	Wi-Fi 802.11ac + Bluetooth 5.0
GPIO	40-pin header (3.3V logic)

Parameter	Value
USB Ports	2× USB 3.0, 2× USB 2.0
Display	2× micro HDMI (4K)
Storage	MicroSD card
Operating Voltage	5V @ 3A
Interfaces	I²C, SPI, UART, PWM, USB

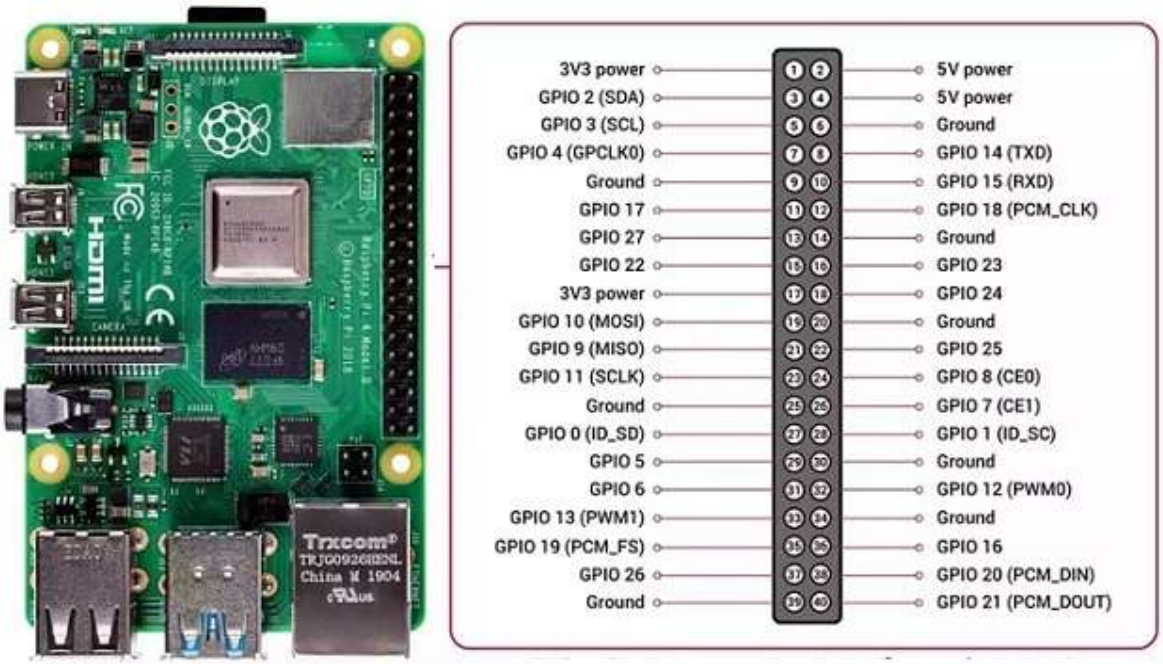

Figure 3.2 Pin Diagram of Raspberry pi 4 Model

Pin Description (Important Pins for This Project)

- GPIO2, GPIO3 → I²C (TCS34725, INA219)
- GPIO10, 9, 11 → SPI (TFT display, RFID)
- GPIO14, 15 → UART (SIM modules / GPS)
- GPIO17, 27, 23, 24 → Motor driver inputs
- GPIO18, GPIO13 → PWM outputs (Motor ENA, ENB)

Applications in the Multifunctional Camouflage Robot

- Real-time video surveillance
- Dynamic camouflage generation using TFT
- Remote monitoring & cloud communication via LTE
- Sensor fusion with PIR, MQ-series, metal detector
- Location tracking using GPS
- Autonomous mobility control using L298N
- Power monitoring & safety with INA219

3. TXS0108E – 8-Channel Logic Level Shifter

The TXS0108E is an 8-channel bidirectional logic level converter used to safely interface 5V devices with the Raspberry Pi's 3.3V GPIO pins. Many hardware modules in the robot—such as the TFT display, RFID reader, GPS module, and some sensors—operate at 5V logic. Directly connecting them to the Raspberry Pi can damage the Pi. The TXS0108E ensures smooth and safe communication between mixed-voltage components by automatically shifting voltage levels in both directions.

Features

- 8 independent bidirectional level-shifting channels
- Supports 1.8V ↔ 3.3V ↔ 5V logic conversion
- Automatic direction sensing (no direction pin required)
- High-speed signal support (up to 100 Mbps)
- Works with SPI, I2C, UART, digital I/O signals
- Low power and compact design

Working Principle

The module has two sides:

- A-Side (Low Voltage) → connected to Raspberry Pi's 3.3V logic
- B-Side (High Voltage) → connected to 5V modules/sensors

Internal MOSFET-based circuits detect the signal direction and shift the voltage accordingly:

- 3.3V from Raspberry Pi → shifted to 5V

- 5V from sensors → stepped down safely to 3.3V

This ensures stable communication without damaging sensitive GPIO pins.

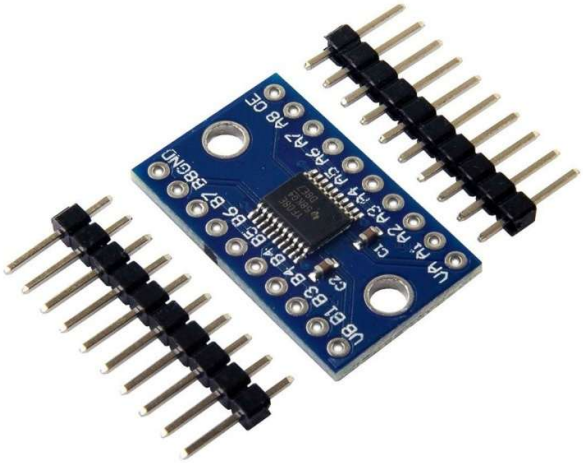

Figure 3.3 TXS0108E LOGIC SHIFTER

4. USB Camera

The USB camera is used as the primary vision system for the multifunctional camouflage military robot. It captures real-time video footage of the environment and helps in surveillance, human detection, obstacle monitoring, and remote live streaming. The Raspberry Pi processes the camera feed directly through its USB 2.0/3.0 ports using Linux-based camera libraries, making it ideal for robotics applications where speed and clarity are important.

Features

- Plug-and-play support with Raspberry Pi (UVC compatible)
- Resolutions ranging from 720p to 1080p depending on the camera
- Real-time video streaming capability
- Wide-angle lens options available
- Works without separate drivers on Raspberry Pi OS
- Low power consumption

Working Principle

The USB camera captures images and sends them to the Raspberry Pi over the USB interface. The Pi uses libraries like OpenCV, FFmpeg, or fswebcam to process, stream, or analyze the video feed.

The video feed is then used for:

1. Live streaming to the operator via LTE

2. Human detection or motion detection
3. Surveillance and monitoring
4. Environment visualization for decision-making

Figure 3.4 USB Camera

5. SIM7670C – 4G LTE Modem

The SIM7670C is a powerful 4G LTE communication module that provides high-speed internet connectivity to the robot. It allows the robot to send live video, GPS data, sensor alerts, and status information to a remote monitoring system through the mobile network. It also supports GNSS (GPS/Glonass/Beidou), making it a dual-functional module for communication + positioning. This module is crucial for long-range operation where Wi-Fi is not available.

Connection Details

- Power: Requires 4V regulated supply from LM2596 buck converter.
- Data Interface:
  - Recommended: USB connection to Raspberry Pi for stable high-speed data.
  - Alternative: UART (TX/RX) via logic level shifter.
- Antennas: Attach both LTE and GNSS antennas for strong connectivity.
- Capacitor: Add 1000–2200 µF capacitor to handle current spikes.

Working Principle

The SIM7670C connects to a mobile network using a standard SIM card.

It works as follows:

1. Raspberry Pi sends AT commands to the module via USB or UART.

2. The module registers on the LTE network.
3. Data is transmitted using MQTT/HTTP to a remote dashboard or mobile app.
4. GNSS module sends location data back to Raspberry Pi.
5. In case of alerts, the robot instantly communicates through the LTE network.

This enables real-time remote control and monitoring from anywhere.

Figure 3.5 SIM7670C

6. NEO-6M GPS Module

The NEO-6M GPS module is a high-sensitivity satellite receiver used to provide **accurate geographic location** of the robot. It allows the system to track its position during surveillance or rescue missions. The module communicates with the Raspberry Pi through UART and includes an **external active patch antenna** to improve signal reception in outdoor environments.

Features

- High-accuracy GPS receiver
- Supports 50+ satellite channels
- Fast time-to-first-fix (TTFF)
- Built-in EEPROM for configuration
- UART communication interface
- External active GPS patch antenna
- Low power consumption
- LED indicator for GPS fix status

Working Principle

1. The module receives signals from multiple GPS satellites.
2. It calculates:
    - Latitude
    - Longitude
    - Altitude
    - Speed
    - Time
3. These values are sent to the Raspberry Pi through UART as NMEA sentences.
4. Raspberry Pi reads and processes these coordinates.
5. GPS data is sent to the cloud/remote user through the SIM7670C LTE module.

This allows the robot to be tracked from anywhere, ensuring safety and remote navigation support.

Connection Details

- VCC → 5V (or 3.3V depending on module)
- GND → Ground6
- TX → Raspberry Pi RX (UART)
- RX → Raspberry Pi TX (UART)
- Use level shifting if required (depends on module logic level).
- Place antenna in an open area for maximum signal.

7. RFID RC522 Module

Figure 3.6: RFID Module

The RFID RC522 module is a 13.56 MHz contactless identification system used for authentication and secure access control in the robot. It ensures that only authorized users can operate or configure the robot.

Features

- Operates at 13.56 MHz
- Supports MIFARE 1K, 4K, Ultralight tags
- SPI, I2C, and UART communication options
- Short-range reading (up to 5 cm)
- Low power consumption
- Fast tag detection and reading

Working Principle

1. The RC522 generates a 13.56 MHz electromagnetic field.
2. When an RFID card or tag enters the field, it gets powered by induction.
3. The tag sends its unique ID (UID) back to the module.
4. The RC522 forwards this ID to the Raspberry Pi through SPI.
5. The Raspberry Pi checks if the card matches an authorized list.
6. If matched → Robot unlocks or enables operation
   If unmatched → Access is denied

This ensures security and prevents unauthorized usage.

Connection Details (SPI with Raspberry Pi)

- SDA / SS → GPIO8 (CE0)
- SCK → GPIO11
- MOSI → GPIO10
- MISO → GPIO9
- RST → GPIO25 (any free GPIO)
- 3.3V → Pi 3.3V pin
- GND → GND

No level shifter needed because RC522 works at 3.3V logic.

8: HC-SR501 PIR Motion Sensor

The HC-SR501 PIR (Passive Infrared) Motion Sensor is used in the robot for human presence detection. It senses infrared radiation emitted by living beings and detects movement within its range. PIR sensors are essential in surveillance robots, as they help identify activity even in low-light or no-light conditions without relying on a camera.

Features

- Detection range: 3 to 7 meters
- Adjustable sensitivity and time delay
- Wide detection angle (about 120°)
- Digital output (HIGH when motion detected)
- Very low power consumption
- Reliable in indoor/outdoor environments

Working Principle

1. The PIR sensor contains two IR-sensitive elements.
2. When a human or animal moves across the sensor's field, the infrared levels change.
3. This change creates a differential signal inside the sensor.
4. The onboard amplifier processes this and outputs a digital HIGH signal.
5. The Raspberry Pi receives this signal and classifies it as motion detected.

This helps the robot identify human presence even in difficult environments where the camera may not have clear visibility.

Figure 3.7: PIR Sensor

9. MQ-2 Gas Sensor (Smoke, LPG, Hydrogen Detection)

Figure 3.8: MQ-2 Sensor

The MQ-2 gas sensor is used in the robot to detect smoke, LPG, propane, methane, and hydrogen gases in the environment. It helps the robot identify fire hazards, gas leaks, or unsafe atmospheric conditions during military surveillance or rescue missions. The sensor outputs an analog signal, which is later converted to digital form using an ADC before sending to the Raspberry Pi.

Features

- Detects multiple gases: Smoke, LPG, Butane, Propane, Methane, Hydrogen
- High sensitivity and fast response
- Analog output for gas concentration
- Long-life and low-cost sensor
- Simple interface with microcontrollers
- Onboard potentiometer for sensitivity adjustment

Working Principle

1. The MQ-2 contains a SnO_2 sensing layer which changes its resistance when exposed to gases.
2. Presence of flammable gases reduces resistance → increases output signal.
3. The analog voltage level is read by an ADC (e.g., MCP3008) or Arduino.
4. Raspberry Pi receives the gas concentration value and compares it with threshold values.
5. If gas level exceeds limit → robot triggers hazard alert or switches to safety mode.

This enables real-time detection of dangerous gas leaks.

10. L298N Motor Driver (Dual H-Bridge)

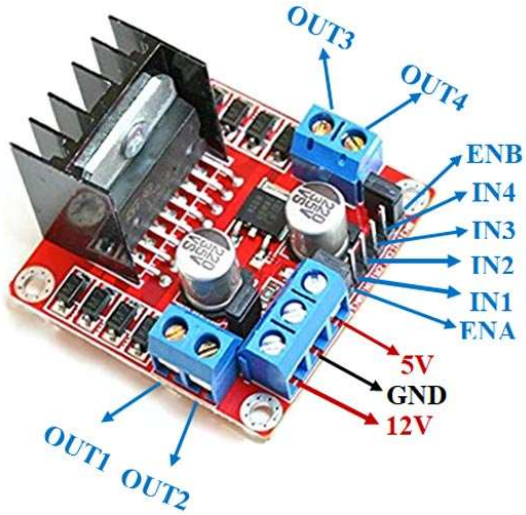

Figure 3.9: L298N Motor Driver

The L298N Motor Driver is a dual H-bridge driver module used to control the DC gear motors of the robot. It allows the Raspberry Pi to manage the robot's movement by providing control over motor direction, speed, and braking. Since the Pi cannot directly drive motors due to high current requirements, the L298N acts as an interface that safely delivers power from the battery to the motors.

Features

- Dual H-Bridge driver (controls 2 motors, or 4 motors when paired)
- Supports forward, reverse, and braking control
- Can handle motor currents up to 2A per channel
- PWM speed control capability
- Built-in 5V regulator (if enabled)
- Sturdy design suitable for robotic applications

Working Principle

1. The Raspberry Pi sends logic signals (IN1–IN4) to the L298N.
2. PWM signals (ENA, ENB) adjust the motor speed.
3. The module switches the polarity of motor terminals to rotate motors:
    - Forward
    - Reverse
    - Brake
4. The driver supplies high current directly from the 12V battery, not from the Pi.

This ensures reliable movement even on rough terrain.

Connection Details

- 12V battery → Motor VCC input
- 5V from buck converter → Logic VCC (optional onboard regulator)
- IN1, IN2, IN3, IN4 → Raspberry Pi GPIO (via TXS0108E)
- ENA, ENB → Pi PWM pins (for speed control)
- Motor outputs → DC motors

Applications in the Camouflage Military Robot

- Controls all movement and navigation
- Enables smooth rotation, turning, and obstacle avoidance
- Supports speed control during patrol
- Essential for autonomous motion commands
- Helps robot move on uneven surfaces during surveillance or rescue missions.

3.3.2 Software Requirements

- Arduino IDE

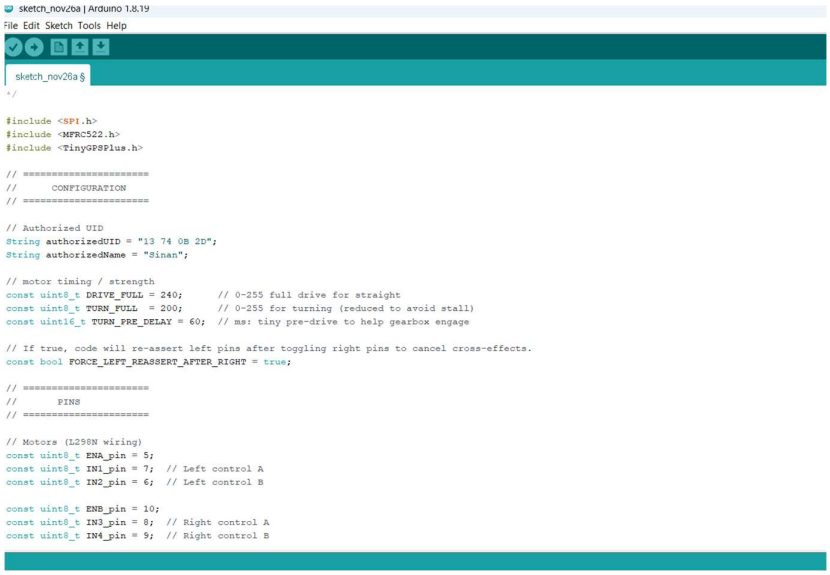

Figure 3.10 Arduino IDE

The program begins by including the SPI, RFID (MFRC522), and TinyGPSPlus libraries, which allow the Arduino to communicate with the RFID sensor and GPS module. An authorized RFID UID is stored as a string, and the system checks this value to allow only verified users to operate the robot. Motor speed and timing values are defined next, where DRIVE_FULL sets the forward speed, TURN_FULL controls the turning speed, and a small TURN_PRE_DELAY helps the gearbox engage smoothly. A safety flag is also included to ensure stable operation of the motor driver by re-asserting certain control pins to avoid cross-effects during turning.

The next part defines all the pin connections for the L298N motor driver. PWM pins (ENA and ENB) control the speed of the left and right motors, while IN1–IN4 set the direction of rotation. These constants allow the Arduino to drive the robot forward, backward, or turn by controlling motor polarity and speed. In theory, this setup provides secure access control through RFID verification, GPS data handling for tracking, and stable motor control for navigation. Overall, this portion of the code prepares the robot for authorized operation, smooth movement, and integration with RFID and GPS modules.

- Python

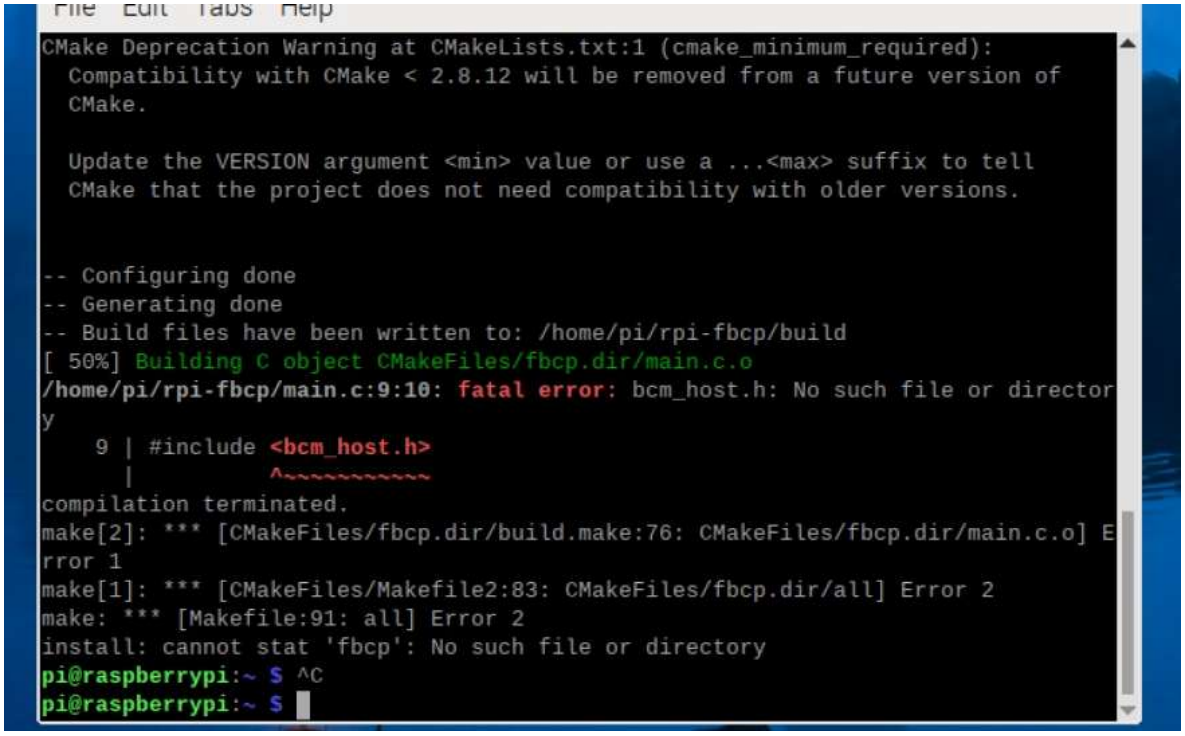

Figure 3.11 Command Prompt

Python is used as the primary high-level programming language in this project due to its simplicity, flexibility, and strong support for hardware interfacing and IoT applications. The Raspberry Pi 4 runs Python scripts to handle real-time video streaming, internet-based communication, and overall system coordination. Python enables seamless integration with the camera module, LTE communication modules, and cloud services, making it suitable for remote monitoring and control operations.

In this project, Python is responsible for capturing live video from the USB camera and transmitting it over the network using IoT protocols. Libraries such as OpenCV and FFmpeg are used for video acquisition, processing, and streaming.

Overall, the use of Python software enhances the intelligence, connectivity, and usability of the system. Its ability to interface with hardware, process data efficiently, and support IoT communication makes it an ideal choice for implementing the multifunctional camouflage military robot.

3.3.3 IMPLEMENTATION

The implementation of the IoT-Based Multifunctional Camouflage Military Robot involves the seamless integration of hardware, software, and communication technologies to build an intelligent robotic platform capable of surveillance, hazard detection, camouflage adaptation, and long-range operation through LTE. The system is centered around the Raspberry Pi 4 Model B, which acts as the core processing unit. This controller manages camera input, sensor readings, motor control, camouflage display generation, and communication with external networks. All components are mounted on a rugged four-wheel chassis powered by a 12V 3S Li-ion battery pack, regulated using reliable buck converters to provide stable voltages to the Pi, sensors, display, and communication modules.

The hardware implementation begins with interfacing the Raspberry Pi with essential modules. The USB camera is attached to the Pi for real-time video streaming, enabling the robot to capture visual information from its surroundings. For camouflage functionality, the TCS34725 color sensor is mounted facing outward to sample ambient colors. These color readings are processed by the Pi and displayed on a 3.5-inch ILI9488 TFT screen, allowing the robot to adapt visually to its environment. Since many sensors and modules operate at 5V logic, the TXS0108E level shifter is used to safely convert logic levels between the Raspberry Pi's 3.3V GPIO pins and higher voltage modules.

Environmental hazard monitoring is implemented using multiple sensors. The MQ-2 and MQ-135 gas sensors detect smoke, LPG, alcohol, CO_2, and general air-quality deviations. The PIR motion sensor identifies human movement, while the metal detector module responds to metallic objects in the robot's path. The INA219 current sensor monitors battery voltage and power consumption to prevent shutdown during high-load operations. Since gas sensors output analog data, an ADC is used to convert these values into a digital format that the Raspberry Pi can process. Each sensor undergoes calibration during implementation to ensure stable and accurate readings.

To enable movement, the robot uses four DC gear motors controlled through an L298N dual H-bridge motor driver. The Raspberry Pi generates directional and PWM control signals, which are passed through the level shifter before reaching the motor driver. This setup allows the robot to move forward, backward, turn, and control speed. The mechanical chassis is designed to provide stability on uneven terrain, making the robot suitable for military and rescue operations.

During implementation, the complete workflow begins when the robot is powered on. The Raspberry Pi initializes all sensors, verifies authorized access through the RFID system, and starts the Python control program. The program activates the camera, retrieves GPS coordinates, reads surroundings through sensors, and generates camouflage patterns. Motor control is enabled either manually through remote commands or autonomously based on sensor logic. All collected data is continuously uploaded to the cloud dashboard for real-time monitoring.

Through this integrated implementation approach, the robot achieves reliable surveillance capabilities, adaptive camouflage, hazard detection, GPS-based tracking, and secure long-range communication. The modular design ensures that additional sensors or AI modules can be incorporated in the future, making the system scalable and suitable for modern defense, disaster response, and industrial safety applications.

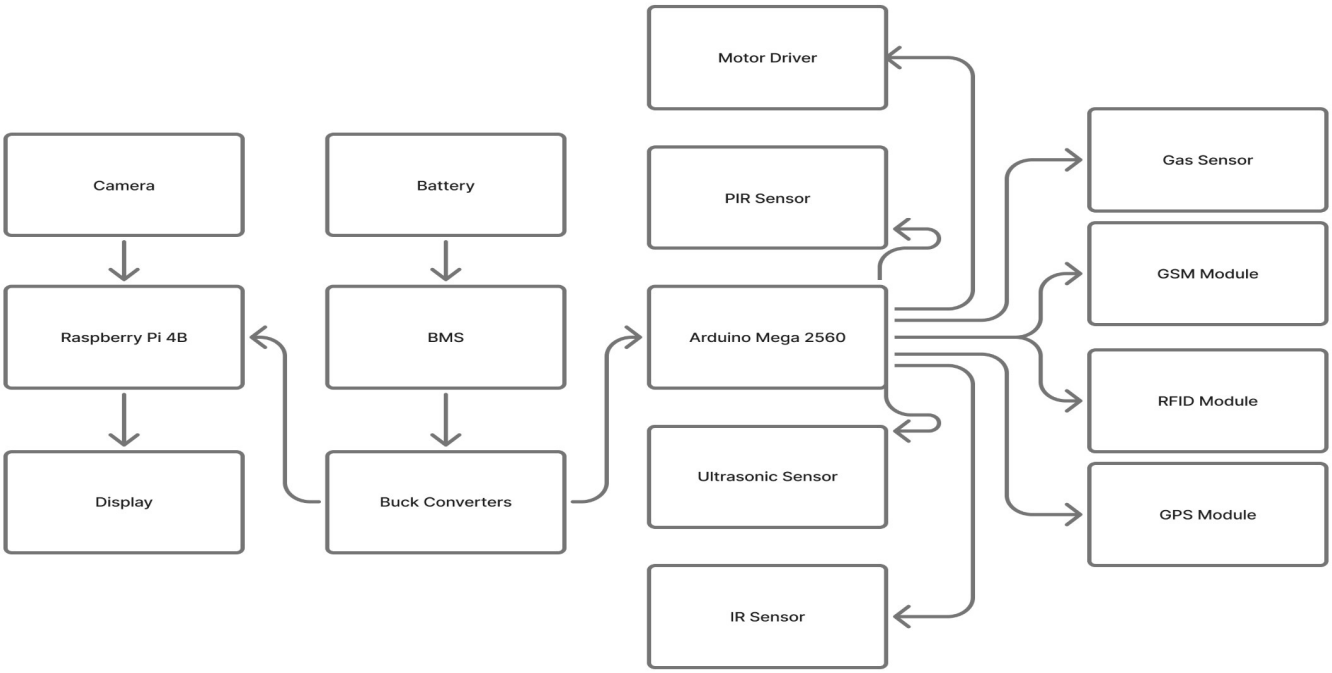

Figure 3.12: Block Diagram of Proposed Model

CHAPTER 4

RESULTS AND DISCUSSION

4.1 RESULT

The IoT-Based Multifunctional Camouflage Military Robot performed successfully during implementation and testing, demonstrating reliable operation across all major modules. The adaptive camouflage feature responded accurately to environmental colors captured by the TCS34725 sensor, and the Raspberry Pi generated matching patterns on the TFT display with very little delay. This confirmed the robot's ability to visually blend with surroundings and reduce visibility during surveillance operations.

The communication system using the SIM7670C LTE module provided stable long-range connectivity. Live video from the USB camera, along with sensor readings and GPS tracking data, were transmitted smoothly to the remote interface. GPS updates remained accurate throughout testing, allowing real-time location monitoring and path tracking. The sensor suite—PIR, MQ-2, MQ-135, metal detector, and RFID—showed consistent and reliable detection. Human presence was identified instantly, gas levels were recorded with correct sensitivity, and metal hazards were detected effectively. RFID authentication also worked without errors, ensuring that only authorized users could operate the robot.

The robot's movement system proved stable, with the four DC motors and L298N driver enabling smooth navigation over indoor surfaces and moderately uneven terrain. Speed and direction control were responsive due to PWM-based motor control, and the battery with BMS offered safe and uninterrupted power. All modules integrated well through the Raspberry Pi's Python control software, which handled data processing, sensor fusion, and communication efficiently.

Overall, the robot achieved its intended objectives, successfully performing camouflage adaptation, surveillance, hazard detection, and remote operation. The results confirm that the system is suitable for applications in military monitoring, disaster response, industrial safety, and security environments.

Based on the sensor readings, the Raspberry Pi decides how the robot should move. Motor commands are sent to the L298N driver, which controls the four DC motors for forward motion,

reverse, and turning. Power for the entire system is supplied by a 12V Li-ion battery with BMS protection, while multiple buck converters generate safe voltage levels for the Pi, sensors, and communication modules. Throughout operation, the robot maintains a continuous cycle of sensing, decision-making, and reporting. The integration of camera streaming, sensor fusion, GPS tracking, and adaptive camouflage results in a system capable of real-time surveillance, hazard detection, secure operation, and autonomous environmental adaptation.

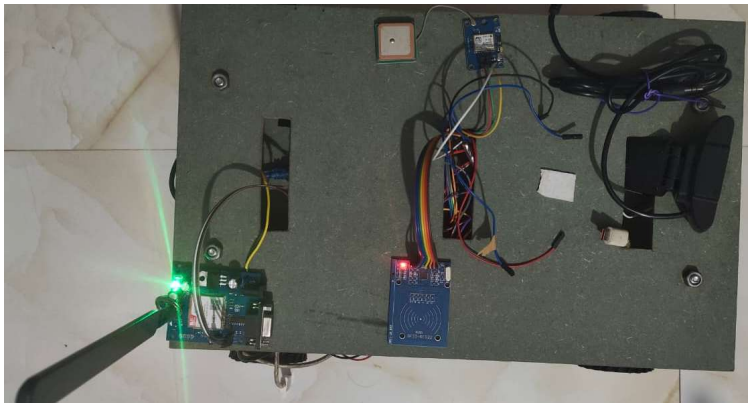

Figure 4.1 Prototype of The Proposed Model

Working flow of entire process

When the multifunctional camouflage military robot is powered on, the Raspberry Pi initializes all connected hardware modules, including the camera, GPS receiver, color sensor, gas sensors, PIR sensor, RFID module, metal detector, and motor driver. The system first performs an authentication step using the RFID reader. Only when a valid RFID tag is detected, the robot unlocks its control functions and becomes ready for operation. Once activated, the robot continuously reads the surrounding colors through the TCS34725 color sensor. These values are processed by the Raspberry Pi, which generates a matching camouflage pattern and displays it on the TFT screen, allowing the robot to visually blend into its environment.

In parallel, the USB camera begins capturing real-time video, which is encoded and transmitted over the LTE network using the SIM7670C module. The Pi regularly collects GPS coordinates from the NEO-6M module and sends them along with the video stream to a remote monitoring dashboard. This enables the operator to view live footage, track the robot's location, and observe sensor readings from anywhere. The communication system also supports remote commands, allowing the user to control movement, request status updates, or trigger specific actions.

While moving, the robot's PIR sensor constantly checks for human or animal motion in front of it. When motion is detected, the robot immediately generates a warning alert and transmits it through the LTE connection. Similarly, the MQ-2 and MQ-135 sensors monitor the air for smoke, LPG, toxic gas, or poor air quality. Any abnormal readings are instantly sent to the operator, allowing early detection of hazardous environments. The metal detector module scans the ground for metallic objects, providing an additional layer of situational awareness for mine detection or inspection operations.

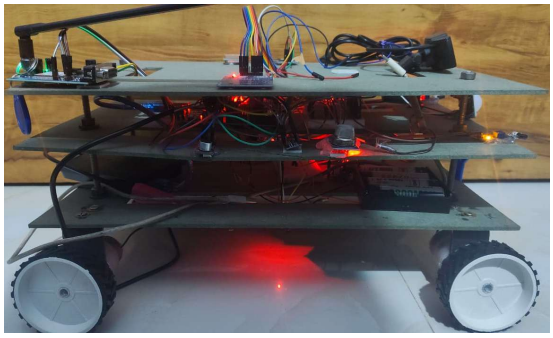

Figure 4.2 Sensor Layer Right

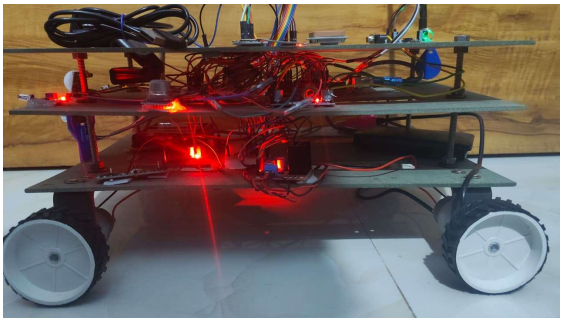

Figure 4.3 Sensor Layer Left

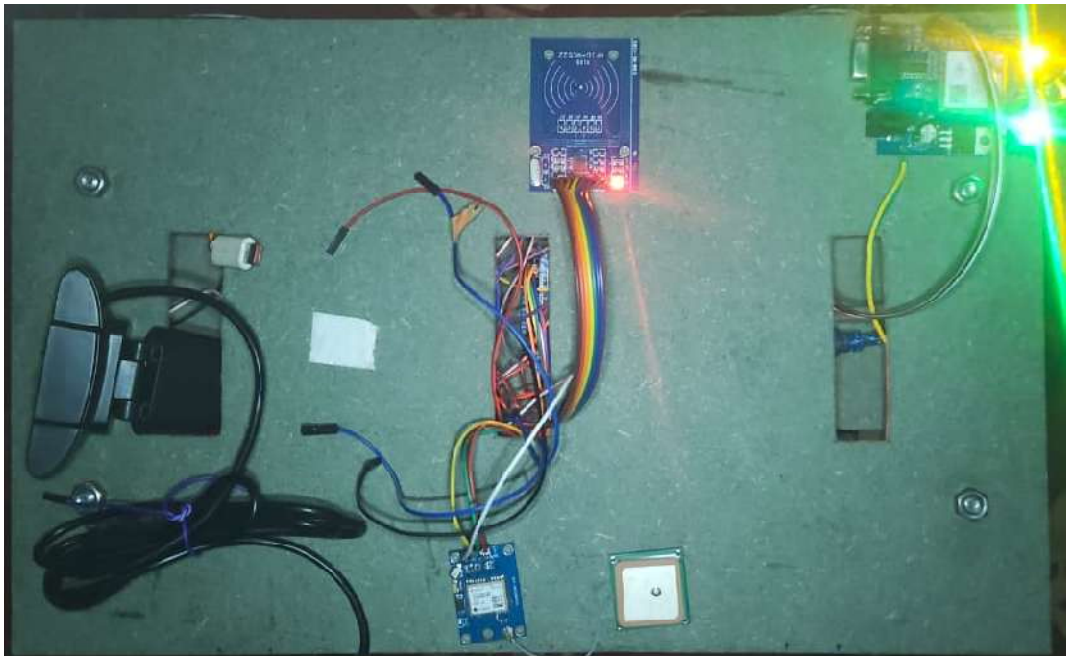

Figure 4.4 Setup Model

4.2 DISCUSSION

The multifunctional camouflage military robot integrates several advanced sensing, communication, and control technologies, and the experimental results highlight both the strengths and practical considerations of the system. The use of a Raspberry Pi as the central controller proved effective for handling multiple tasks such as video processing, sensor fusion, and LTE communication simultaneously. The system demonstrated good real-time performance, especially in camera streaming and GPS tracking, confirming that the hardware and software stack is capable of supporting continuous field operation. The adaptive camouflage feature, implemented through the color sensor and TFT display, functioned reliably in controlled environments, showing quick response to changes in ambient color. This indicates the robot's potential for low-visibility operations, although further enhancement in outdoor lighting adaptability may improve its effectiveness in real-world terrains.

The multi-sensor detection network performed well, with PIR motion detection, gas sensing, and metal detection all responding accurately to their respective triggers. The combination of these sensors provides a comprehensive environmental awareness capability, making the robot suitable for hazardous area inspection and security applications. However, some sensors, such as MQ-135 and MQ-2, have warm-up time requirements and may show slight fluctuations depending on temperature and humidity. Proper calibration and filtering algorithms may be necessary for deployment in extreme conditions.

The LTE-based communication system enabled long-range control and monitoring, which is one of the strongest components of the project. The SIM7670C module maintained stable connectivity during testing, though occasional network fluctuations affected video quality. This highlights the importance of network availability in remote operation scenarios. Motor movement, driven through the L298N driver and geared DC motors, was smooth and stable for indoor and semi-rough terrains, but battery load and motor heating could become limiting factors during prolonged outdoor use. A more efficient motor driver or high-torque motor.

Overall, the project successfully demonstrates how IoT, adaptive camouflage, and multi-sensor detection can be combined into a single robotic platform for surveillance, rescue, and defense applications. The system is modular and provides real-time intelligence, but also reveals areas for such as improved power management, enhanced machine vision, and more advanced AI-based decision-making for fully autonomous operation.

CHAPTER 5

CONCLUSION AND FUTURE SCOPE

5.1 CONCLUSION

The IoT-Based Multifunctional Camouflage Military Robot successfully demonstrates how intelligent sensing, adaptive camouflage, and IoT-based communication can be integrated into a compact and mobile robotic platform. The project achieved its primary goal of creating a system capable of functioning in hazardous or high-risk environments by providing real-time monitoring, remote control, and autonomous detection capabilities. By combining Raspberry Pi, Arduino Mega, and multiple sensors, the robot effectively collects environmental data and responds with appropriate actions, enhancing safety and situational awareness.

The adaptive camouflage system performed efficiently, allowing the robot to visually blend into its surroundings using the TCS34725 color sensor and TFT display. This feature supports stealth operations, making the robot suitable for military reconnaissance and security applications. The integration of LTE-based communication further strengthened the system, enabling live video streaming, continuous GPS tracking, and real-time alert transmission. These communication capabilities ensure that operators can monitor and control the robot from long distances, increasing its usability in remote or inaccessible areas.

The robot's multi-sensor subsystem, including PIR motion detection, gas sensors, and a metal detector, provided accurate and timely feedback during testing. These sensors allow the robot to detect human presence, toxic gases, and metallic hazards, making it useful not only for defense applications but also for industrial safety and disaster response scenarios. The RFID module ensured secure access control by allowing only authorized users to activate the system, adding an extra layer of operational security.

Overall, the project validates the effectiveness of combining IoT, robotics, and adaptive technologies to develop a multifunctional system suitable for real-world field operations. While the prototype performs reliably and meets the intended objectives, further improvements such as AI-based navigation, enhanced camouflage algorithms, thermal imaging, and extended power management can elevate the system to advanced autonomous robot standards. The work completed establishes a strong foundation for future development in smart military robotics and intelligent surveillance platforms.

5.2 FUTURE SCOPE

The multifunctional camouflage military robot developed in this project can be significantly enhanced with future technological advancements. One important direction is the integration of AI-based computer vision, which would allow the robot to autonomously detect humans, animals, obstacles, and hazards using advanced image processing rather than relying only on sensors. Deep-learning models could help classify threats, recognize patterns, and make intelligent decisions without constant human supervision. This would transform the robot into a partially or fully autonomous surveillance system capable of operating independently in complex environments.

Another major enhancement lies in improving the adaptive camouflage system. Future versions can incorporate flexible OLED or e-ink panels instead of a single TFT display, allowing the robot's entire surface to dynamically change color or pattern to match its surroundings. Machine learning algorithms can also be used to analyze environmental textures and generate more realistic camouflage for outdoor terrains such as forests, deserts, or urban environments. This will make the robot far more effective for stealth missions and border security operations.

In terms of mobility and endurance, the robot can be upgraded with solar charging systems, high-capacity Li-ion batteries, and improved motor drivers to enable longer operational duration. Additional features such as autonomous path planning, terrain mapping using LiDAR, and all-terrain wheel or track mechanisms can greatly expand the robot's usability in rugged outdoor locations. These upgrades will help the robot remain operational for extended missions without frequent manual intervention.

Finally, the communication and safety system can be expanded by incorporating 5G connectivity, encrypted communication protocols, swarm-robot coordination, and advanced hazard prediction algorithms. With 5G, the robot could transmit ultra-low-latency video and sensor data, enabling real-time decision-making even in high-risk military zones. Coordinated multi-robot operation could also enable group surveillance, cooperative search-and-rescue, and rapid area coverage. These advancements together position the system for adoption in defense, disaster management, industrial inspection, and autonomous security applications.

REFERENCES

[1] P. Kavipriya, G. Jegan, E. Venkat and D. N. Ranganadh, "Design of IoT Based Multifunctional Camouflage Military Robot," *2021 International Conference on Artificial Intelligence and Smart Systems (ICAIS)*, Coimbatore, India, 2021, pp. 1431–1435, doi: 10.1109/ICAIS50930.2021.9395991.

[2] H. Kishore, S. S. Nilugal, S. Nawaz, S. Yogaraja Adithya and K. V. J. Prakash, "Designing a Multifunctional Army Robot Utilizing Camouflage Technique," *2024 International Conference on Smart Systems for Applications in Electrical Sciences (ICSSES)*, Tumakuru, India, 2024, pp. 1–5, doi: 10.1109/ICSSES62373.2024.10561265.

[3] N. P. Kulkarni, S. N. Khan, R. R. Rathod, A. R. Choure and M. G. Chinchole, "Advanced Camouflage Robot for Military Spying and Machine Learning," *IEEE International Conference on Blockchain and Distributed Systems Security (ICBDS)*, Pune, India, 2024, pp. 1–6, doi: 10.1109/ICBDS61829.2024.10837423.

[4] K. M. Anand Vijay, S. Purustut, R. Suhas, C. Pavan and P. Pradhan, "A Live Human Being Detector in War Fields and Earthquake Location Using Robot with Camouflage Technology," *2018 IEEE 3rd International Conference on Recent Trends in Electronics, Information & Communication Technology (RTEICT)*, Bengaluru, India, 2018, pp. 2244–2249, doi: 10.1109/RTEICT42901.2018.9012601.

[5] A. Al-Fuqaha, M. Guizani, M. Mohammadi, M. Aledhari and M. Ayyash, "Internet of Things: A Survey on Enabling Technologies, Protocols, and Applications," *IEEE Communications Surveys & Tutorials*, vol. 17, no. 4, pp. 2347–2376, 2015.

[6] K. Ashton, "That 'Internet of Things' Thing," *RFID Journal*, vol. 22, no. 7, pp. 97–114, 2009.

[7] N. Kumar and S. Sharma, "IoT-Based Smart Surveillance Robot Using Raspberry Pi," *International Journal of Engineering Research & Technology*, vol. 8, no. 6, pp. 89–94, 2019.

[8] M. Banzi and M. Shiloh, *Getting Started with Arduino*, 3rd ed., Sebastopol, CA, USA: O'Reilly Media, 2014.

[9] E. Upton and G. Halfacree, *Raspberry Pi User Guide*, 4th ed., Hoboken, NJ, USA: Wiley, 2016.

[10] R. Want, "An Introduction to RFID Technology," *IEEE Pervasive Computing*, vol. 5, no. 1, pp. 25–33, Jan.–Mar. 2006.

[11] J. Wang, B. Cao and Z. Lv, "Mobile Robot Obstacle Avoidance Based on Ultrasonic Sensors," *IEEE International Conference on Mechatronics and Automation*, Changchun, China, 2018, pp. 1012–1017.

[12] S. Haykin, *Communication Systems*, 5th ed., New York, NY, USA: Wiley, 2014.

[13] B. Siciliano and O. Khatib, *Springer Handbook of Robotics*, 2nd ed., Berlin, Germany: Springer, 2016.

[14] P. McKerrow, *Introduction to Robotics*, Reading, MA, USA: Addison-Wesley, 1991.

[15] R. Siegwart, I. R. Nourbakhsh and D. Scaramuzza, *Introduction to Autonomous Mobile Robots*, 2nd ed., Cambridge, MA, USA: MIT Press, 2011.

APPENDIX A

1. CIRCUIT DIAGRAM

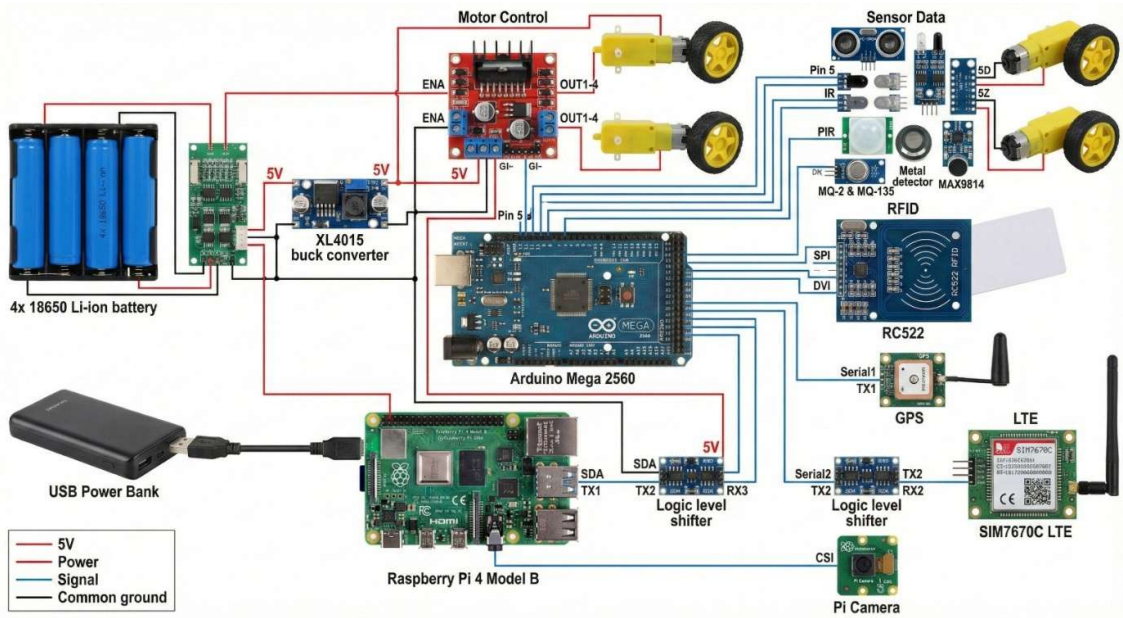

2. COMPONENTS LIST

- Raspberry Pi 4 – Main system processor
- Arduino Mega – Sensor and motor control
- L298N Driver – Motor direction and speed
- DC Motors – Robot movement
- USB Camera – Live video capture
- SIM7670C LTE – Remote communication
- GPS Module – Location tracking
- RFID RC522 – Secure authentication
- Color Sensor – Camouflage detection
- Li-ion Battery – Power supply

APPENDIX B

SPECIFICATIONS OF ARDUINO MEGA 2560

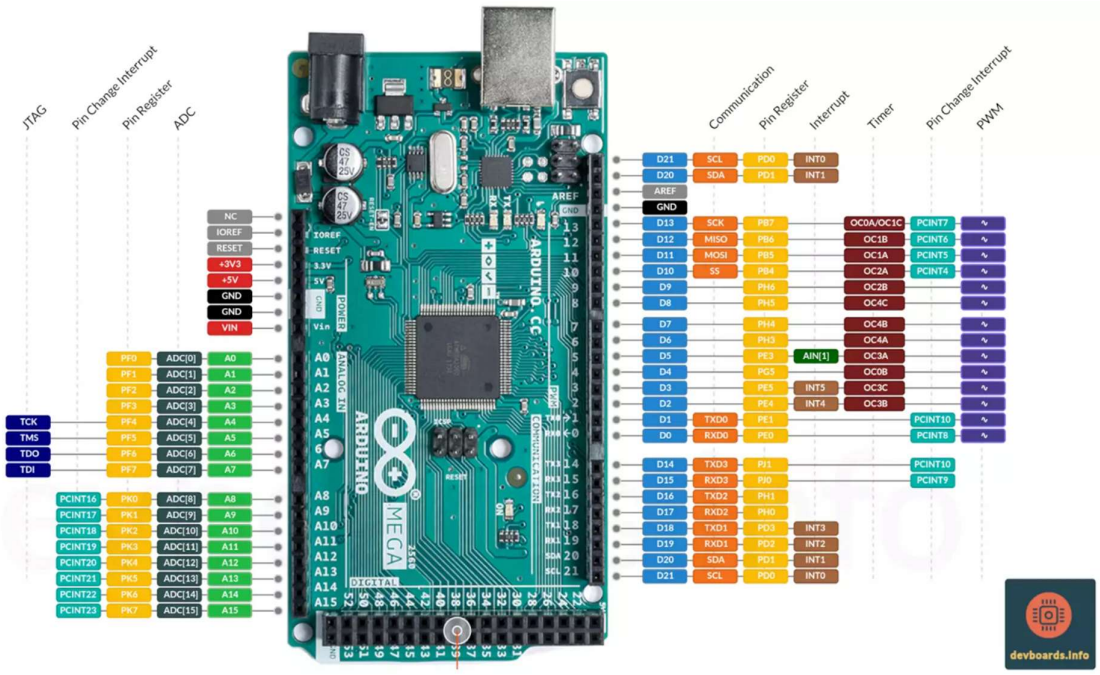

Arduino mega pin

Processor & Memory

- Microcontroller: ATmega2560
- Architecture: 8-bit AVR RISC
- Clock Speed: 16 MHz
- Flash Memory: 256 KB (8 KB used by bootloader)
- SRAM: 8 KB
- EEPROM: 4 KB
- Instruction Set: AVR Enhanced RISC

Peripherals & Timers

- Timers:
  - 2 × 8-bit timers
  - 4 × 16-bit timers

- ADC:
    - 10-bit resolution
    - 16 analog input channels (A0–A15)

Communication Interfaces

- UART:
    - 4 × Hardware Serial (Serial0–Serial3)
- I²C (TWI):
    - Pins: SDA (20), SCL (21)
    - Speed: 100 kHz / 400 kHz
- SPI:
    - Pins: SS(53), MOSI(51), MISO(50), SCK(52)

On-Chip Features

- Watchdog Timer
- Brown-Out Detection
- Power-On Reset
- Programmable Fuse Bits
- Sleep Modes (Idle, Power-down, Standby)

Power & Electrical Specifications

- Operating Voltage: 5 V
- Input Voltage (VIN): 7–12 V (recommended)
- Maximum Input Voltage: 20 V
- DC Current per I/O Pin: 20 mA (40 mA max)
- Total DC Current: 200 mA

Physical & Connectors

- Digital I/O Pins: 54
- Analog Input Pins: 16
- Total GPIO Pins: 70

- USB Interface: USB-B
- Form Factor: Mega Board
- LEDs: Power, TX, RX

SPECIFICATIONS OF RASPBERRY PI 4 MODEL B

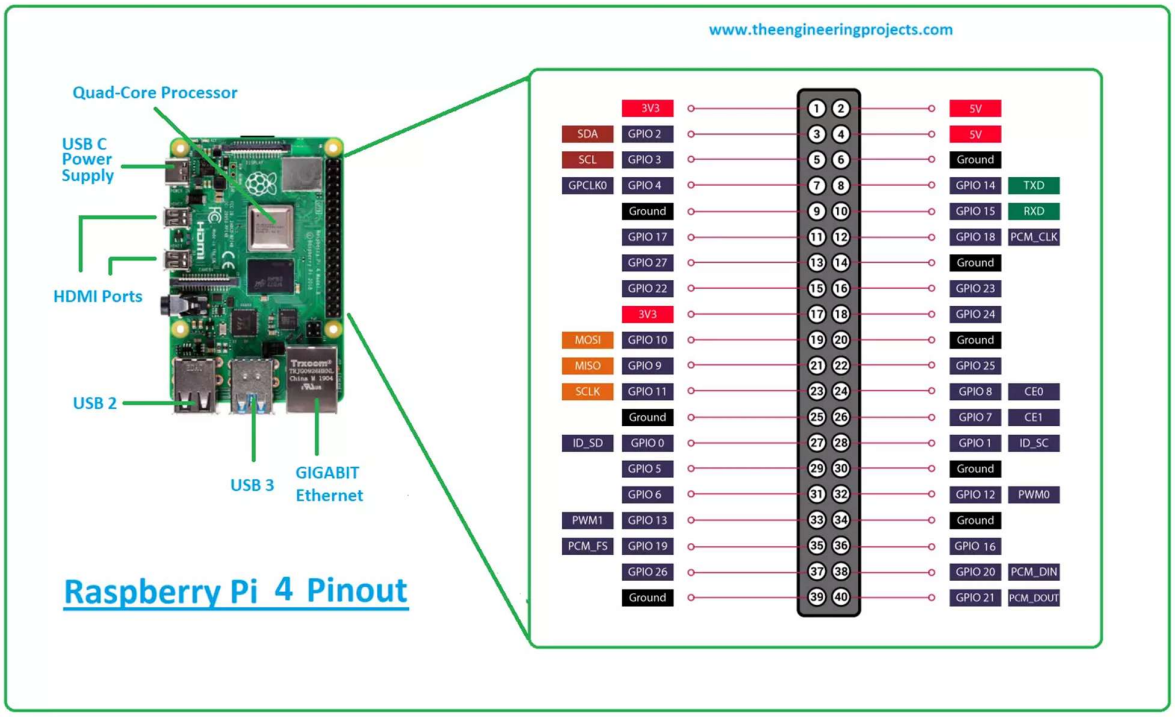

Raspberry pi 4

Processor & Memory

- SoC: Broadcom BCM2711
- CPU: Quad-core ARM Cortex-A72 (64-bit)
- Clock Speed: Up to 1.5 GHz
- RAM: 4 GB LPDDR4
- Architecture: ARMv8-A

Graphics & Multimedia

- GPU: VideoCore VI
- Video Output:
    - Dual micro-HDMI (up to 4K @ 60 fps)

- Camera Interface: CSI (Camera Serial Interface)
- Display Interface: DSI

Connectivity

- Wi-Fi: IEEE 802.11 b/g/n/ac (2.4 & 5 GHz)
- Bluetooth: Bluetooth 5.0, BLE
- Ethernet: Gigabit Ethernet
- USB:
    - 2 × USB 3.0
    - 2 × USB 2.0

GPIO & Interfaces

- GPIO Pins: 40-pin header
- GPIO Voltage Level: 3.3 V (not 5 V tolerant)
- Supported Interfaces:
    - UART
    - SPI
    - I²C
    - PWM

Power & Electrical Specifications

- Operating Voltage: 5 V
- Power Input: USB-C

APPENDIX C

HARDWARE CODE AND FLOWCHART

```
#include <SPI.h>

#include <MFRC522.h>

#include <TinyGPSPlus.h>

String authorizedUID = "13 74 0B 2D";

bool unlocked = false;

#define ENA 5

#define IN1 7

#define IN2 6

#define ENB 10

#define IN3 8

#define IN4 9

#define TRIG 22

#define ECHO 23

#define PIR 26

#define MQ2 A0

#define MQ135 A1

#define SS_PIN 53

#define RST_PIN 49

MFRC522 rfid(SS_PIN, RST_PIN);

TinyGPSPlus gps;

void move(int l1,int l2,int r1,int r2,int spd){

  digitalWrite(IN1,l1); digitalWrite(IN2,l2);

  digitalWrite(IN3,r1); digitalWrite(IN4,r2);

  analogWrite(ENA,spd); analogWrite(ENB,spd);
```

```
}
void stopAll(){ analogWrite(ENA,0); analogWrite(ENB,0); }
long distanceCM(){
  digitalWrite(TRIG,LOW); delayMicroseconds(2);
  digitalWrite(TRIG,HIGH); delayMicroseconds(10);
  digitalWrite(TRIG,LOW);
  long d=pulseIn(ECHO,HIGH,20000);
  return d? d/58:-1;
}
void setup(){
  Serial.begin(115200);
  Serial1.begin(9600);
  pinMode(ENA,OUTPUT); pinMode(ENB,OUTPUT);
  pinMode(IN1,OUTPUT); pinMode(IN2,OUTPUT);
  pinMode(IN3,OUTPUT); pinMode(IN4,OUTPUT);
  pinMode(TRIG,OUTPUT); pinMode(ECHO,INPUT);
  pinMode(PIR,INPUT);
  SPI.begin(); rfid.PCD_Init();
  stopAll();
  Serial.println("System Locked - Scan RFID");
}
void loop(){
  if(rfid.PICC_IsNewCardPresent() && rfid.PICC_ReadCardSerial()){
    String uid="";
    for(byte i=0;i<rfid.uid.size;i++){
      if(rfid.uid.uidByte[i]<16) uid+="0";
      uid+=String(rfid.uid.uidByte[i],HEX)+" ";
```

```
    }
    uid.toUpperCase();
    Serial.println(unlocked?"Access Granted":"Access Denied");
    rfid.PICC_HaltA();
  }
  if(!unlocked){ stopAll(); return; }
  if(Serial.available()){
    char c=toupper(Serial.read());
    if(c=='F') move(0,1,1,0,240);
    else if(c=='B') move(1,0,0,1,240);
    else if(c=='L') move(1,0,1,0,200);
    else if(c=='R') move(0,1,0,1,200);
    else if(c=='S') stopAll();
  }
  Serial.print("Dist: "); Serial.print(distanceCM());
  Serial.print(" PIR: "); Serial.print(digitalRead(PIR));
  Serial.print(" MQ2: "); Serial.print(analogRead(MQ2));
  Serial.print(" MQ135: "); Serial.println(analogRead(MQ135));
  while(Serial1.available()) gps.encode(Serial1.read());
  if(gps.location.isValid()){
    Serial.print("GPS: ");
    Serial.print(gps.location.lat(),6);
    Serial.print(",");
    Serial.println(gps.location.lng(),6);
  } delay(300);
}
```

FLOW CHART

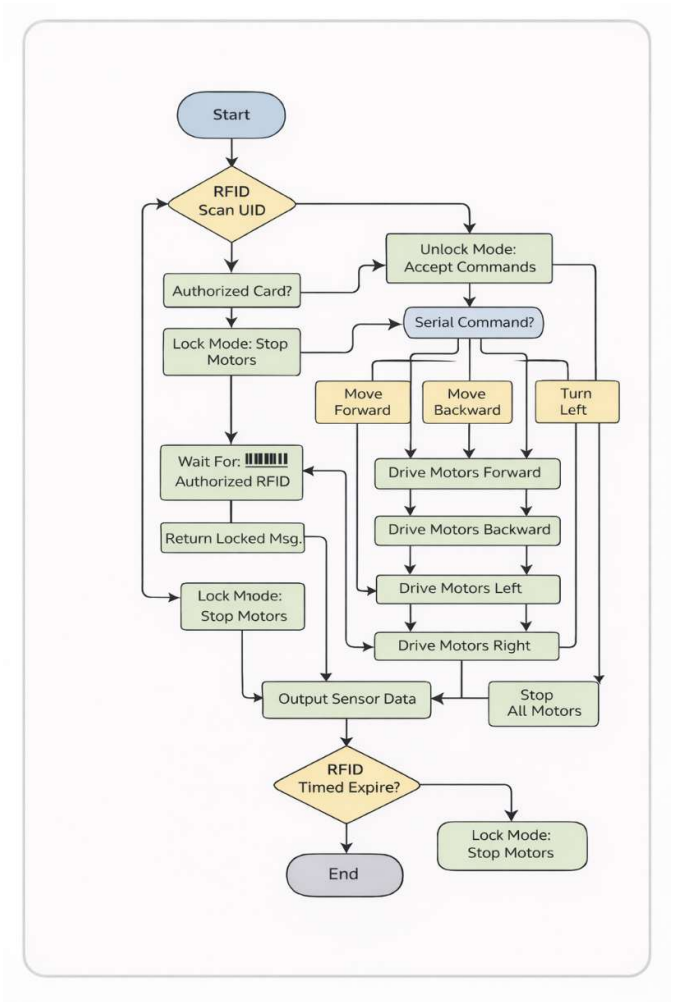
Start
RFID Scan UID
Unlock Mode: Accept Commands
Authorized Card?
Serial Command?
Lock Mode: Stop Motors
Move Forward
Move Backward
Turn Left
Wait For: Authorized RFID
Drive Motors Forward
Drive Motors Backward
Return Locked Msg.
Drive Motors Left
Lock Mode: Stop Motors
Drive Motors Right
Output Sensor Data
Stop All Motors
RFID Timed Expire?
Lock Mode: Stop Motors
End

APPENDIX D

IEEE BASE PAPER

2024 International Conference on Smart Systems for applications in Electrical Sciences (ICSSES) | 979-8-3503-6404-0/24/$31.00 ©2024 IEEE | DOI: 10.1109/ICSSES62373.2024.10561265

Designing a Multifunctional Army Robot Utilizing Camouflage Technique

Hari Kishore
Dept. of E&CE
Siddaganga Institute of Technology
Tumkur, Karnataka
1si20ec045@sit.ac.in

Sangamesh S Nilugal
Dept. of E&CE
Siddaganga Institute of Technology
Tumkur, Karnataka
1si20ec083@sit.ac.in

Syed Nawaz
Dept. of E&CE
Siddaganga Institute of Technology
Tumkur, Karnataka
1si20ec098@sit.ac.in

Yogaraja Adithya S
Dept. of E&CE
Siddaganga Institute of Technology
Tumkur, Karnataka
1si20ec109@sit.ac.in

K V Jyothi Prakash
Dept. of E&CE
Siddaganga Institute of Technology
Tumkur, Karnataka
jyothiprakash.kv@gmail.com

***Abstract*—The rapid advancement of science has led to the development of technologies aimed at improving human life, particularly in the field of defense where innovations like the Camouflage Robot have been created to mitigate loss of life in hazardous military operations and disasters. Inspired by chameleons' camouflaging technique, this robot integrates a camera module, TFT LED display, ESP32 microcontroller, cloud-based IoT interfaces, and a customized mobile application for data retrieval and management, along with Raspberry Pi and Pi camera for image processing. Additionally, it is equipped with temperature sensor (DS18B20), metal sensor, ultrasonic sensor, and MQ9 gas sensor to detect environmental factors like temperature variations, metallic objects, obstacles, and gas concentrations, enhancing its functionality. The robot's operations can be remotely controlled via a mobile phone interface, offering flexibility and ease of use in diverse scenarios, ultimately representing a significant advancement in defense and disaster management technologies, minimizing human casualties and enhancing operational efficiency in challenging environments.**

***Index Terms*—Chameleon's camouflage technique, MQTT, camera module, TFT LED display, Android Studio.**

I. Introduction

The proposed multifunctional army robot stands as a groundbreaking advancement in security and surveillance technology, specifically engineered to operate seamlessly in dynamic and challenging environments such as war zones and border areas. Drawing inspiration from the adaptive capabilities of chameleons, this innovative robot incorporates a unique camouflage technology that empowers it to discern colors and dynamically adjust its covering, effectively blending into diverse surroundings with inconspicuous precision. The robot is equipped with a sophisticated sensor array, featuring an inductive proximity sensor for precise landmine detection, an MQ5 sensor for identification of harmful gases, a temperature sensor for assessing environmental temperature, an ultrasonic sensor for accurate distance measurement. This comprehensive suite of sensors empowers the robotic system to actively collect real-time data, providing crucial insights for security operations in real-world scenarios. Operated remotely through a mobile phone using a Wi-Fi connection, the robot demonstrates an extensive communication range, making it adaptable for deployment in diverse scenarios including star hotels, malls, disaster-stricken areas, and high-security locations. The core of its functionality lies in the integration of a camera module, enabling real-time video capture and surveillance. This feed is complemented by a Thin-Film Transistor (TFT) LED display unit, playing a pivotal role in executing the camouflaging feature by adapting visual elements to seamlessly harmonize with the environment. Image processing using raspberry-pi for human detection is done using OpenCV, COCO datasets and evaluating algorithms. The overarching objective of this robotic system is to enhance border security by automating detection processes in highly secured areas. This innovative approach not only mitigates dependence on human efforts but also minimizes errors, thereby significantly amplifying the overall effectiveness of security operations and response mechanisms. With its sophisticated sensor technology, remote operability, and adaptive camouflage, this multifunctional army robot emerges as a formidable tool at the forefront of modern security and surveillance capabilities, promising to redefine the standards of protection in complex and high-stakes environments.

II. Literature Survey

The study by Skanda *et al.*, [1] discusses about versatile army robot with sensors like wireless camera and color sensor inspired by Chameleon camouflaging. The model utilizes cloud-based IoT interfaces and Wi-Fi modules for extended communication, aiming to enhance information retrieval and storage. It explored real-world effectiveness, the impact on disaster response, and advancements in sensor technologies and military robotics.

Nuthan and Pavan [2] introduced a revolutionary solution in the form of a robot, designed to perform complex tasks and address challenges in high-risk areas like military operations. The robot,equipped with an observation camera, camouflage RGBs, and metal-detecting PIR sensor, aims to mitigate human losses during hazardous activities such as online surveillance and land mine detection. Key findings include identifying the surroundings, color, enabling it to adjust its own color for better camouflage.

Rashmi Hegde and Raju [3] proposed an innovative approach to address security concerns by introducing advanced technologies in defense. It involves the use of Army robots equipped with cameras, sensors, locators, and video monitors to enhance surveillance in high-risk areas. The key features includes additional parameters such as a Wi-Fi module for real-time data transmission from the camera to the video monitor and a PIR sensor to detect intruders, aiming to minimize errors in defense and ensure the safety of the state

Kiran Kumar *et al.,* [4] introduced Camouflage Robot in the form of integral solution, which plays a crucial role in search and rescue missions, as well as infiltration into enemy territories, effectively substituting soldiers in hazardous war zones. The standout feature of this paper lies in its camouflaging ability, where sensors detect the surroundings and project it onto the robot's body, ensuring its discrete presence and making it difficult for enemies to capture or detect. The primary objective introduced in paper is to employ a wireless, multi-purpose army robot utilizing camouflage technology.

In paper [5] the authors proposes an advanced approach to defense expenditures by introducing state-of-the-art security measures to safeguard borders from trespassers. It involves the utilization of Army robots equipped with cameras, sensors, metal detectors, and video screens, particularly in border areas where traditional military methods prove less effective by enhancing surveillance and security by leveraging advanced technology to monitor and respond to potential threats. The primary focus of their system is to achieve camouflage, incorporating additional features such as a WiFi module for real-time data processing from the camera to the video screen and a PIR sensor to track intruders.

Kavipriyal and Jegan [6] proposed a significant initiative in the defense sector by allocating substantial funds to implement both traditional and advanced security measures, enhancing border security and protecting forces from potential trespassers. It involves the strategic use of robotics in defense operations, leveraging their high efficiency compared to human forces. It introduce the robot which is equipped with a vehicle-mounted camera for image capture and color detection, which allow it to discreetly navigate enemy territory and transmit information to the controller. The primary objective of the paper is to strengthen defense capabilities through the integration of robots, thereby safeguarding human lives.

The study done by Prashanth *et al.,* [7] proposed a ground breaking solution, where in military federations are incorporating robots in high-risk areas where human intervention proves less effective. The core concept of this paper is inspired by the chameleon's camouflage technique, aimed to develop an autonomous wireless multifunctional robot with camouflaged technology. Controlled through a PC, the robot employs a camera to capture images, adapting its color settings according to the ground it detects in the surrounding environment.

Srinivasa Reddy and Chandra Shekar [8] proposed a Camouflage robot which serves a crucial role in minimizing human losses, allowing it to stealthily navigate enemy territory and transmit information to the controller via the camera. Equipped with a dark vision camera for surveillance and targeting enemy intruders and landmines, the proposed robot acts as a valuable asset in military operations.

The literature survey highlights an innovative army robot that harnesses camouflage technology along with advanced features like wireless cameras and sensors. This robot dynamically adjusts its coloration for optimal camouflage, thereby enhancing its surveillance capabilities. However, previous methods utilizing RGB matrices have demonstrated limitations. In response, the proposed solution integrates cameras and TFT LED displays, thereby overcoming these challenges and achieving superior camouflage effectiveness. This enhancement not only improves security by reducing the risk of detection in critical military operations but also enhances situational awareness and operational control. Additionally, the incorporation of image processing capabilities using Raspberry Pi further augments human detection, contributing to heightened security measures. Overall, the proposed system represents a significant advancement over earlier approaches, providing enhanced security and operational efficiency in challenging environments.

III. System Overview

The system overview and the methodology implemented in the project is given in Fig. 1. It provides overview of sensors, communication and visualization of model.

A. Sensor Network

The system employs a sophisticated sensor network to gather crucial information about its surroundings. Each sensor plays a vital role in ensuring the system's effectiveness.

Temperature Sensor

- The temperature sensor, integrated into the army robot, measures ambient temperature using thermocouples, providing an electrical signal proportional to the temperature. Its sensitivity ensures accurate temperature detection, crucial

for monitoring environmental conditions during military operations.

Gas Sensor (MQ9)

• The gas sensor detects the presence of various gases, including alcohol, benzene, methane, hexane, LPG, and carbon monoxide.

Ultrasonic Sensor

• The ultrasonic sensor, integrated into the army robot, detects obstacles and measures distances within a range of 2 to 400 centimeters (or 1 to 4 meters). Its reliability and precision in emitting ultrasonic pulses and measuring their return time enable accurate obstacle detection and navigation in various environments during military operations, enhancing the robot's situational awareness and operational effectiveness.

B. Actuator Control

The system's actuators are responsible for executing the tasks commanded by the ESP32 microcontroller. Each actuator plays a critical role in enabling the robot's movement and functionality.

DC Motor

• A DC motor powers the robot's movement, converting direct electrical current into mechanical energy.

• This enables the robot to navigate its environment and reach designated locations.

C. Communication and Visualization

NodeMCU ESP8266

• IOT development platform combining the ESP8266 Wi-Fi module with a user-friendly development board, and it is used for wireless connectivity.

TFT LED Display

• The TFT LED display provides real-time visual feedback of the camera footage, enabling the operator to accurately assess the robot's surroundings and make informed decisions.

GPS Module

• The GPS Module is used to determine current position of the robot.

Camera

• Provides a real-time video feed to operator, allowing user to experience the perspective of remotely controlled vehicles or devices.

D. Image processing

• The video captured by the camera is analysed using image processing. OpenCV is the platform used for image processing. Python is used for performing OpenCV operations.

• The labled datasets are collected for COCO dataset library which is a large-scale object detection, segmentation, and captioning dataset that is widely used in computer vision research. The COCO dataset is often used for bench marking and evaluating algorithms in tasks such as object recognition and captioning.

Response

• Based on the results of image recognition process the end user will be notified with the message.

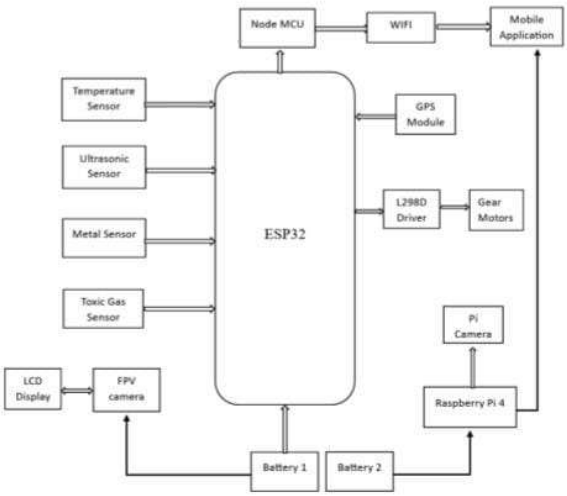

Fig. 1. Block diagram of Multi-functional Army Robot

The multi-functional army robot system is controlled by an ESP32 microcontroller, coordinating tasks and communication between components. It includes sensors for monitoring temperature, detecting metal and toxic gases, along with a camera and LED display for capturing and displaying surroundings for camouflaging which is the main feature of the robot. A Raspberry Pi microcontroller handles image processing for human detection. Gear motors ensure precise movement. The system is complemented by a mobile application serving as a user interface for remote control and real-time data display, emphasizing its adaptability for military and security purposes.

IV. System Software

Arduino IDE

• The Arduino Integrated Development Environment (IDE) is a crucial tool in the world of microcontroller programming.

• It serves as a comprehensive platform that simplifies the entire development process. Its user-friendly interface provides a dedicated space for coding.

• The IDE's toolbar streamlines essential tasks such as code uploading, verification and real-time monitoring of serial

communication.

Android Studio

• Android Studio is a Integrated development environment (IDE) for Android app development, provided by Google.
• It offers a comprehensive suite of tools for developers to design, build and debug Android applications.
• It is used to create a android application in this project.

Flutter

• Flutter is a free, open-source software development kit (SDK) created by Google for cross-platform mobile app development.
• Allows developers to create apps for web, desktop and cross-platform that run on android and iOS devices.
• A source code is taken from Flutter for android studio for better working.

MQTT (Message Queuing Telemetry Transport)

• It is a lightweight messaging protocol that enables data exchange between constrained devices and server applications.
• It is used to communicate host (android application) and client (robot).

V. Flowchart

The flowchart in Fig. 2 illustrates the sequential steps involved in operating a robot. Essentially, the bot reads commands from the app, receives input from the sensors, processes the commands and displays the results in the app.

The flowchart shows how a multipurpose army robot with camouflage capabilities operates. First, the date and time are configured. Next, the First Person View feature is activated, which lets the operator see what's around the robot via its camera on an LED screen. After then, the robot waits for instructions from a smartphone app to make sure it can stay in its current disguise mode. In the event that compatibility problems occur, a fresh command is prompted by an error message. The robot carries out the command and sends messages for human detection together with the collected data to an android device. After that, it notifies a command center of its location before ending all operations. Overall, the flowchart provides an overview of the multi-functional army robot's operation, from initialization and data collection to receiving commands and sending location updates.

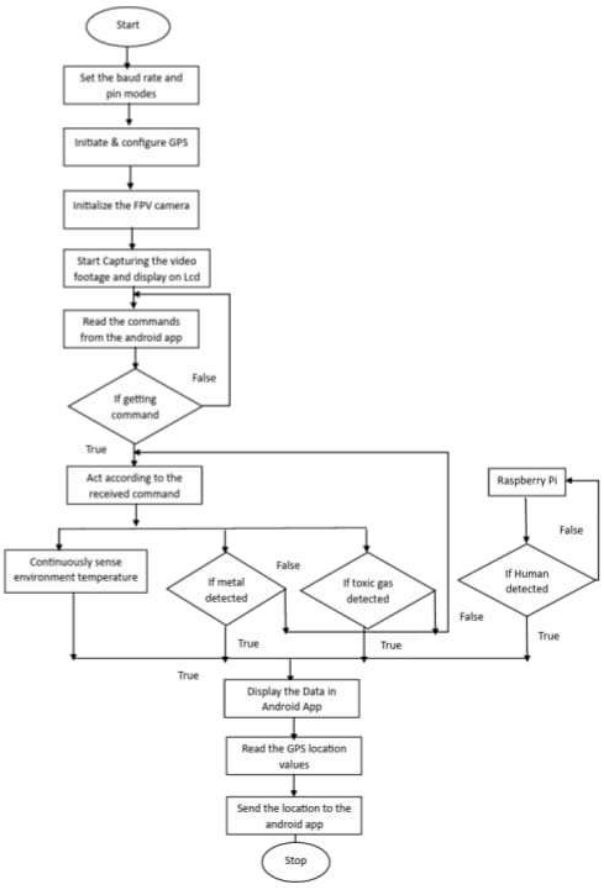

Fig. 2. Flow Chart of Multi-functional Army Robot

Fig. 3. Showcasing of camouflage robot

VI. Results and Discussion

The results upon implementation of the proposed multi-functional army robot incorporating Chameleon's camouflaging technique are shown in Fig. 3 and Fig. 4.

The integration of Chameleon's camouflaging technique represents a significant advancement over previous designs. In contrast to older approaches such as using RGB matrix displays, the use of a TFT LED display allows for more seamless blending with the surroundings, thus minimizing the risk of detection.

Furthermore, the incorporation of a Raspberry Pi for image processing and human detection offers improved accuracy in identifying and tracking human presence compared to previous methods. This enhancement greatly enhances situational awareness, enabling timely responses to potential threats. In Fig. 3 the integration of Chameleon's camouflaging technique using a TFT LED display shows the robot blend seamlessly with its surroundings, thus minimizing the risk of detection.Through real-time video capture and dis-

Fig. 4. Data displayed on android app

play, the robot successfully adapts its appearance to match the environment. Utilizing image processing techniques with Raspberry Pi for human detection has yielded satisfactory results in accurately identifying and tracking human presence. This capability enhances situational awareness and facilitates timely response to potential threats. The incorporation of various sensors for temperature monitoring, metal detection, and toxic gas detection has proven to be reliable in providing crucial environmental data for informed decision-making. The integration of ESP32 microcontroller and cloud-based IoT interface enables seamless communication and control of the robot through a customized mobile application as shown in Fig. 4. The parameters displayed on appication are

Longitude and Latitude - These parameters indicate the geographical coordinates of the robot's current location. Longitude represents the east-west position, while latitude represents the north-south position on the Earth's surface. Knowing the precise location of the robot is crucial for situational awareness and strategic deployment.

Gas Detected: This parameter displays the type of gas detected by the robot's sensors. It could include gases such as carbon monoxide, methane, or any other potentially harmful or combustible gases.

Distance: This parameter indicates the distance between the robot and nearby objects or obstacles. It helps in navigation and obstacle avoidance, allowing the robot to maneuver safely in its environment without collisions.

Temperature: This parameter shows the current ambient temperature in the robot's vicinity. Monitoring temperature variations is essential for assessing environmental conditions and ensuring the proper functioning of equipment, especially in extreme temperature environments.

Face Detection: This parameter indicates whether the robot's image processing system has detected a human face in its field of view. Face detection is crucial for identifying potential threats or targets, as well as for human-robot interaction and communication.

These parameters collectively provide real-time data about the robot's surroundings, its operational status, and potential hazards, enabling operators to make informed decisions and respond effectively to changing situations.

VII. Conclusion

The proposed Robot introduces a revolutionary approach to defense by prioritizing the use of camouflage techniques, ensuring that the bot remains minimally detected by enemies. Sensor integration and image processing for human detection is essential for improving soldiers awareness of the battlefield and facilitating the creation of plans. The robots ability to provide real-time data about the battlefield proves instrumental in addressing this challenge. Furthermore, the Robot simplifies soldier tasks by utilizing sensors that offer detailed information about the war zone, including the exact location of dangers like landmines. In conclusion, this defense initiative not only introduces a camouflage approach but also significantly contributes to improving soldier safety and operational efficiency through advanced sensor technology and real-time battlefield data.

References

[1] Skanda H N, Smitha S Karanth, Suvijith S, Swathi K S, Dr. P N Sudha, "Iot Based Camouflage Army Robot," *Journal of Applied Science and Computations*, vol. 6, issue 5, May 2019

[2] Nuthan M R and Pavan Kumar, "Camouflage Technique Based Multifunctional Army Robot," *Perspectives in Communication, Embedded-Systems and Signal-Processing*, vol. 4, issue 7, Oct. 2020, ISSN: 2566-932X.

[3] Rashmi Hegde and T. Raju, "Camouflage Technique Based Multifunctional Army Robot," *Science and Management* , vol. 3, issue 9, Sep. 2020.

[4] Kiran Kumar K, Harshitha S Shetty, Joanne S George, Krithika P, Sunaina Kashyap, "Camouflage Based Multifunctional Army Robot," vol. 7, issue 8, 2020.

[5] Chaithra, Puneeth A, Tejaswini N R, Ramya R, Swathi H S, "Camouflage Technique Based Multifunctional Army Robot," *Journal of Computer Science and Information Technology Research* vol. 8, issue 2, pp: 26-32 ,Jun. 2020.

[6] P. Kavipriya1, G. Jegan, "Design of IOT Based Multifunctional Camouflage Military Robot," *Proceedings of the International Conference on Artificial Intelligence and Smart Systems*, 2021, ISSN: 0970-2555.

[7] Prashanth C R, Deepika S, Jagruth S, Jalaja M, Rachana S L , "Camouflage Surveillance Robot In Defense Using Artificial Intelligence," *International Research Journal of Engineering and Technology*, vol. 9, issue 5, May 2022, e-ISSN: 2395-0056.

[8] N. Srinivasa Reddy and S N Chandra Shekhar , "Iot Based Robot for Military Application," vol. 52, issue 6, No. 2, June 2023, ISSN: 0970-2555.

MILITARY CAMOUFLAGE ROBOT APP INTERFACE

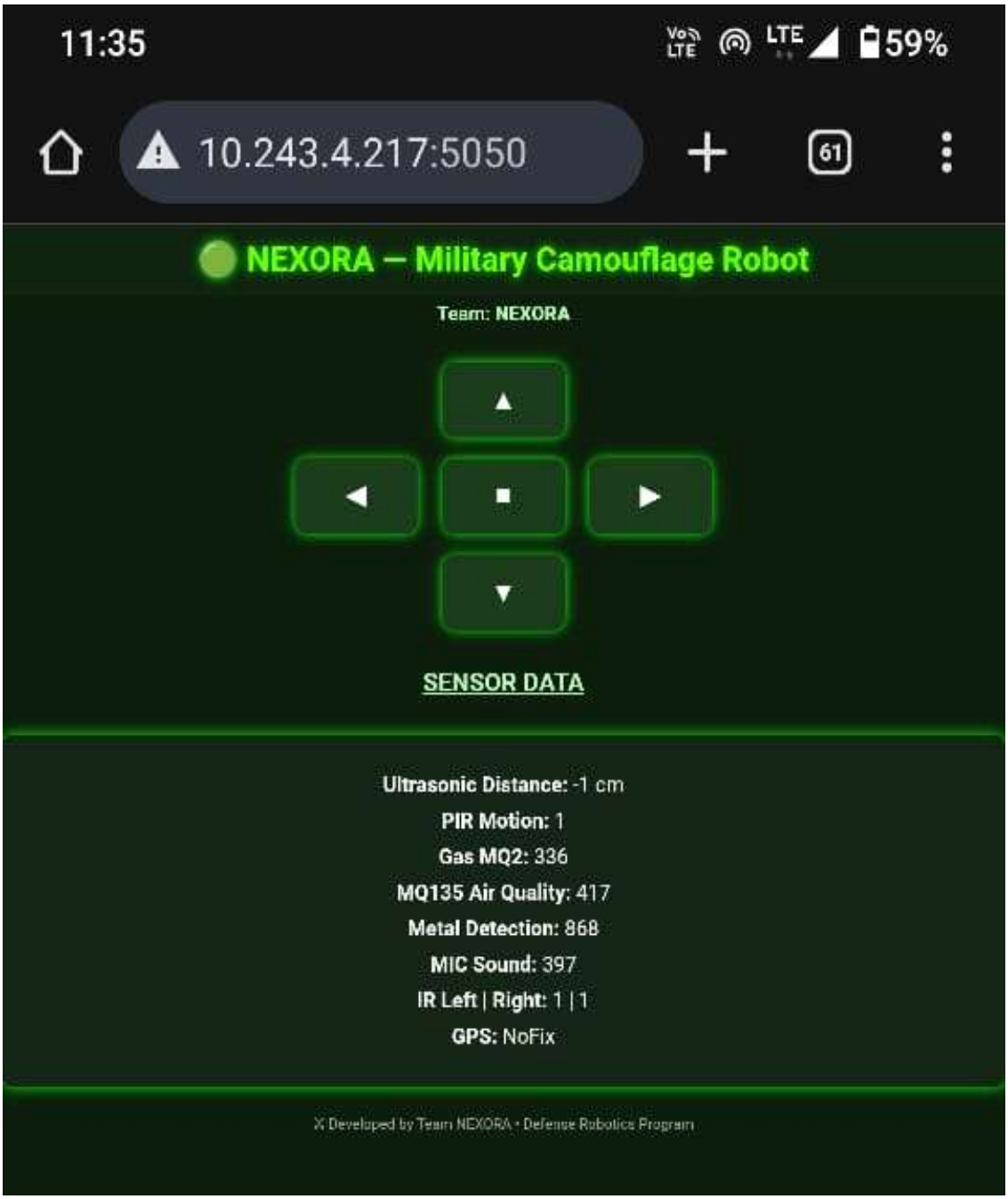

H.K.B.K COLLEGE OF ENGINEERING ,Bengaluru-45
Department of Electronics and Communication Engineering

PROJECT BUDGET

Project Title: IOT Based Multifunctional Camouflage Military Robot

Team Members: Gagan BD, Mohammed Sinan, Vaishnavi V, Vikas S

Guide Name: DR. Maaz Ahmed

Group Number: 18

SL.NO	ITEM DESCRIPTION	QUANTITY	TOTAL COST(₹)
1	Raspberry pi 4	1	6500
2	Arduino Mega	1	3500
3	Gear Motors	4	160
4	SIM 7670C	1	1600
5	Web Camera	1	1200
6	Other Component's	18	7500
7	Labour's charge	-	1000
8	Miscellaneous	2	1800
9	**Total**	**28**	**23,260**

Guide Signature